Contents

1	**Introduction**	**3**
1.1	About this manual	3
2	**Installation**	**7**
2.1	Unpacking the Eclipse router	7
2.2	Transporting the unit	7
2.3	Preparing for rack mounting	8
2.4	Fitting and removing the doors	10
3	**System components**	**13**
3.1	Some possible system variants	13
3.2	Standard Eclipse router	14
3.3	Front view of the Eclipse router	15
3.4	Rear view of the Eclipse router	16
3.5	Modules used in Eclipse	18
3.6	Types of input module	18
3.7	Arrangement of crosspoint modules	21
3.8	Types of output module	23
3.9	Other Eclipse modules	25
3.10	Standard Eclipse router diagram	27
4	**Building larger routers**	**29**
4.1	Adding dual outputs up to 256	30
4.2	Adding extra sources	34
4.3	Adding remote source frames	37

4.4 Adding more stacks 40
4.5 Stack expansion modules 41
4.6 Fitting & removing stack expansion modules 42
4.7 Arrangement of stack expansion modules 43
4.8 Diagrams of enhanced Eclipse routers 46

5 Configuration 49

5.1 Types of Configuration 49
5.2 Setting up Eclipse hardware 50
5.3 Configuring the Eclipse PSU 1904 50
5.4 Configuring signal modules 51
5.5 Setting frame address switches 56
5.6 Connecting control signals 58
5.7 Eclipse software configuration 63
5.8 Firmware configuration 63
5.9 Local configuration 69
5.10 Remote configuration 77

6 Troubleshooting 83

6.1 System failure 84
6.2 Major system error 86
6.3 System error 86
6.4 Minor error 87
6.5 Diagnostics 88

7 Specification 89

1 Introduction

The Eclipse router has been designed to provide a flexible approach allowing for more inputs (source expansion) or more outputs (destination expansion). This makes it possible to create routers which are larger in both “dimensions”.

1.1 About this manual

The information contained in this manual is divided into chapters, arranged as follows:

- Introduction (this section) - contains general information about the Eclipse router and this manual
- Installation - describes how to unpack and install the Eclipse router
- System components - contains information about type, location and fitting of Eclipse modules
- Building larger routers - contains information about enhanced Eclipse routers
- Configuration - contains information about hardware and software configuration
- Troubleshooting - a guide to solving problems
- Support information - contains warranty information and support, specifications etc.

It is intended that the chapters be read in order as illustrated by the flow chart opposite.

Flow chart to illustrate the process from unpacking to use

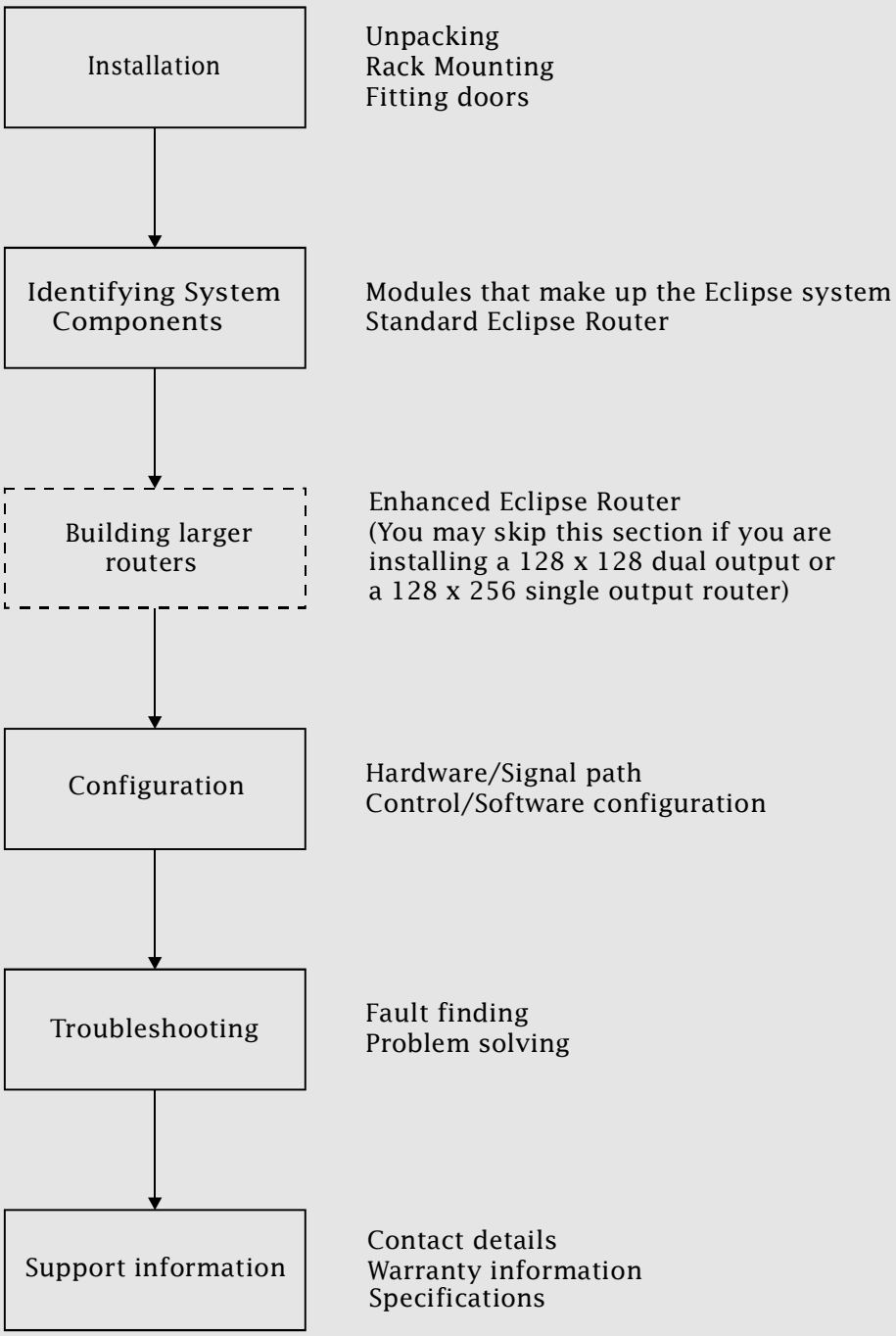

Terms and abbreviations used in this manual

When discussing a product as versatile as the Eclipse router it is useful to have a common language.

The following general terms and abbreviations are used throughout this manual:

Dual output	An output and a copy of that output on 2 BNC connectors
Source/input	Source and input are used interchangeably to describe a serial digital video signal supplied to the router by another piece of equipment
Destination/output	Destination and output are used interchangeably to describe a serial digital video signal supplied from the router to another piece of equipment
Power supply unit (PSU)	The unit which converts mains (line) voltage to the 5 Volts dc used internally
Rack unit (RU)	Standard unit of measure for rack height (1.75 inches, 44.1 millimetres)

The following Eclipse specific terms and abbreviations are used:

Stack	A number of eclipse frames connected together (usually on top of each other) consisting of one or two output frames providing up to 256 outputs and between one and eight input frames providing up to 1024 inputs
Input frame/Source frame	The frame which houses input and crosspoint modules
Output frame/ Destination frame	The frame which houses output modules
Remote source frame	A source frame not directly fixed to another frame but joined by expansion cables
Local source frame	A source frame directly fixed to another frame with signals linked by internal ribbon cables
Standard Eclipse router	One source frame fixed to one destination frame (15 RU)
Enhanced Eclipse router	Any router physically larger than a standard Eclipse router

2 Installation

2.1 Unpacking the Eclipse router

The Eclipse router is typically packed as shown below.

The standard Eclipse router is 15 RU high. Expansion frames are between 7 and 15 RU high, depending on configuration.

Larger routers are normally shipped in crates.

The Eclipse router shown with external cardboard sleeve removed

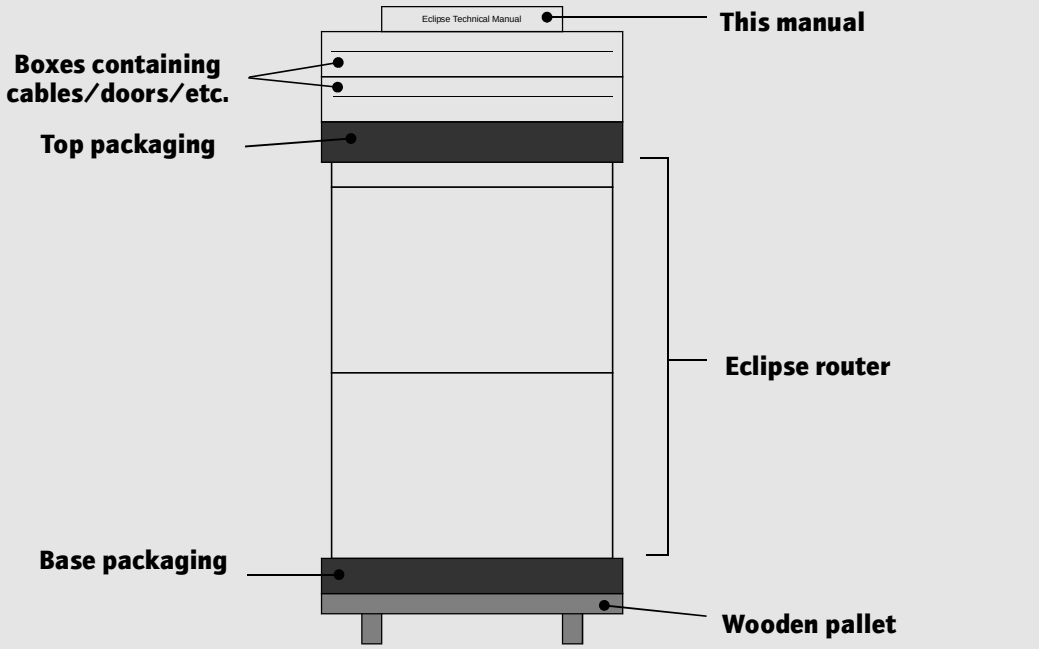

2.2 Transporting the unit

The unit is intended to be transported on the pallet until it is as close as possible to the equipment rack it is to be installed in.

***WARNING*: This equipment is extremely heavy.**

2.3 Preparing for rack mounting

***WARNING*: This product may contain Electrostatic Devices (ESD). Precautions to minimise the risk of damage, due to electrostatic discharge during handling, are recommended.**

When installing a large system (i.e. more than one physical unit) or expanding an existing installation, it is necessary to identify the different parts and install them in suitable positions in the equipment rack. This is explained in chapter 4.

- Leave the doors and cables (if supplied) in their own packaging but remove from the main packing box
- Remove the shipping bar from the front of each frame by removing the six screws(A) as shown below
- Remove the PSU to minimise the weight of the unit as described on the following page
- The fan unit may also be removed if desired
- Lift the unit into a standard 19" rack and secure using the rack mounting ears
- Refit the PSU (and fan if removed)

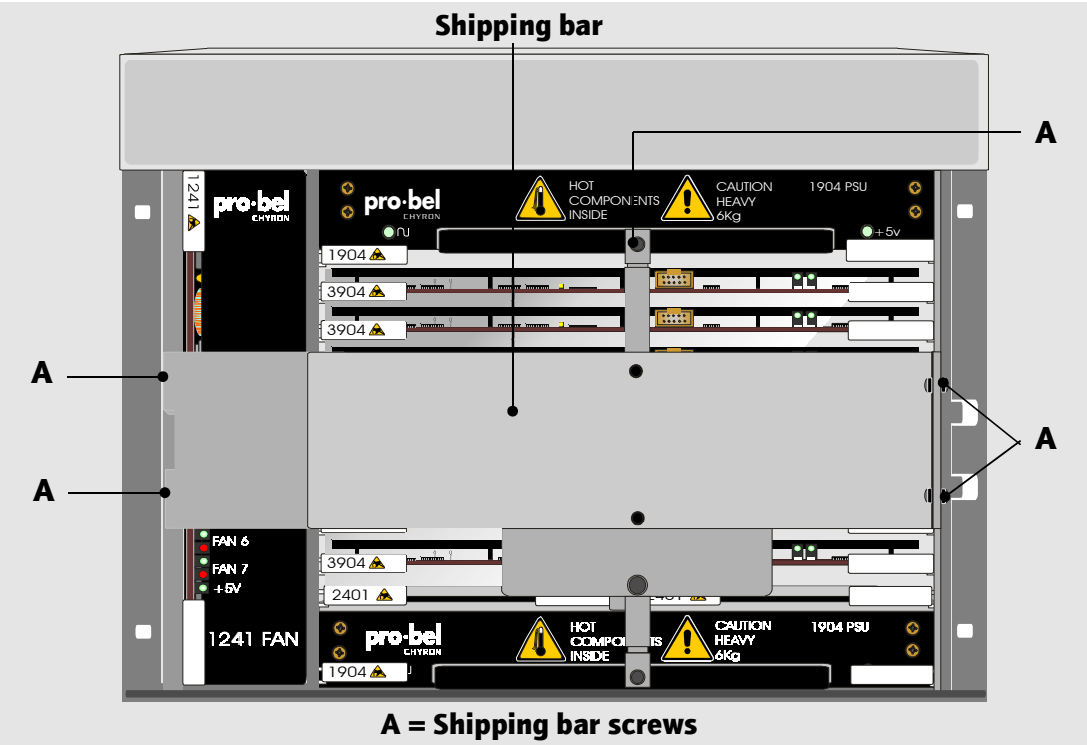

Note: It may be easier to fit the unit onto a shelf in the rack enclosure. This is acceptable practice as no convection cooling is employed in the Eclipse router.

Removing and refitting the PSU

The PSU is removed by pulling gently and evenly on the ejectors at the edge of the unit until it disengages from the motherboard①. With the ejectors pointing forwards the PSU may then be removed from the rack by pulling the folded handle at the front②.

When removing the PSU be careful to support it underneath. Take care as it is heavy.

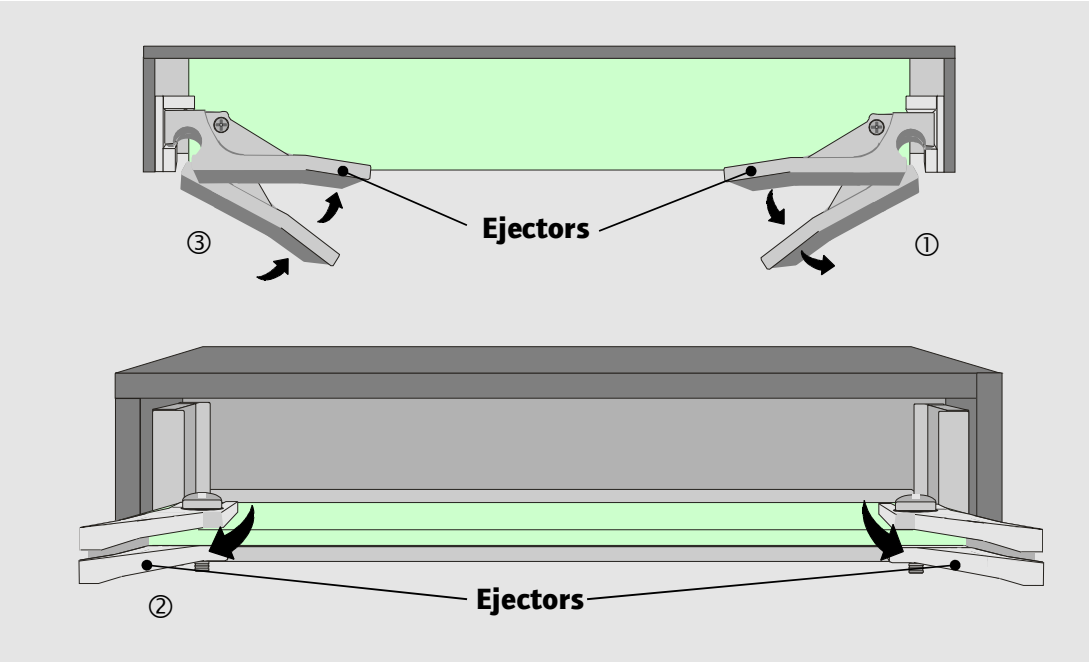

To refit the PSU first engage it in the guides, then push it gently into the rack ensuring that the back of the ejectors engage into their slots. Once the PSU is in place push the ejectors inwards as shown in the diagram③.

Removing and refitting the fan

The fan is removed in the same way as the PSU, except that it is fitted vertically within the frame, not horizontally. The ejectors are located at the top and bottom of the frame.

2.4 Fitting and removing the doors

The doors may be fitted now or left until the router is fully configured.

The fan modules provide adequate cooling for the Eclipse router even with the doors removed, although hot exhaust air will be forced out of the front of the bay.

Doors must be fitted during normal operation ie once the installation and configuration phases are complete.

To fit the door, first rotate the peg clockwise to unlock it (if locked) and hold it in the up position. Fit the door over the fixed hinge on the frame and close it to approximately 45 degrees. Now slide the moving latch along the door towards the hinge.

The peg will click into the door holding the moving latch over the hinge.

Fitting the doors

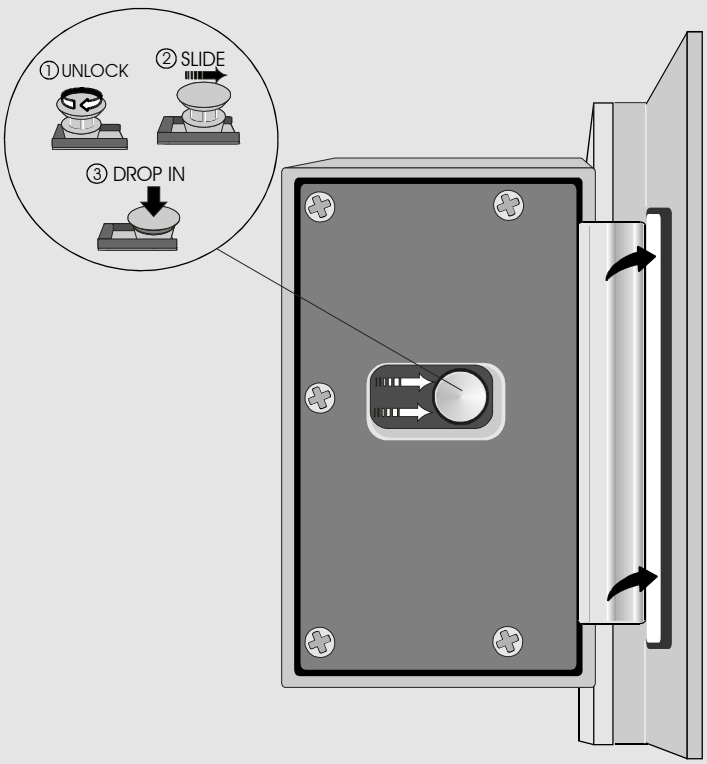

To remove a door pull up the peg located near the hinge assembly and slide the moving latch along the door away from the hinge.

The peg may be locked in the up position by rotating it anti-clockwise. With the moving latch in this position the door may be lifted off the hinge and away from the frame.

Removing the door

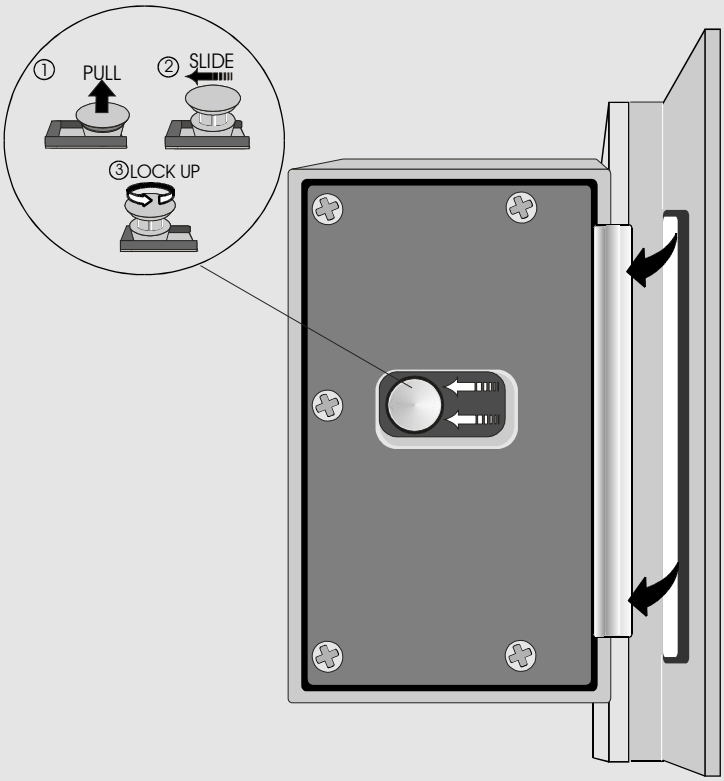

3 System components

3.1 Some possible system variants

The Eclipse router offers a highly configurable approach to the distribution of serial digital video signals. Numerous combinations of modules and frames are possible, creating routers from 128 x 128 (which may be partially equipped) to 1024 x 1024. Additionally systems may be:

- Expandable or non-expandable
- Single or dual control
- Main or main and backup PSU
- Automatic standard sensing
- Multiple references
- Fitted with reclocking inputs

Automatic standard sensing

The following digital video data rates are automatically detected and reclocked:

- 143 MBit/s
- 177 MBit/s
- 270 MBit/s
- 360 MBit/s

Multiple references

The Eclipse router has two switching reference inputs (625 line and 525 line). Destinations may be selected (via the control system) to switch timed, to either reference. Additionally an optional sub-module may be fitted to the control module allowing the correct reference to be automatically selected in a multi-reference 270 Mbit installation.

Single control

Any Eclipse router may be specified with single or dual control. Standard routers are supplied with single control only. For dual operation it is necessary to fit a second control card adjacent to the main control card in the first output frame and additional frame interface modules in other frames.

Main and backup PSUs

Each 7 RU Eclipse frame has two positions for fitting PSUs. During normal operation two PSUs are fitted. In non critical applications a single PSU may be specified. In this instance the single PSU is fitted in either of the two positions available.

3.2 Standard Eclipse router

In order to most simply describe Eclipse, this manual describes a standard system and then discusses variations on that theme. In reality no system is a distinct standard system compared to any other but for the purposes of this manual the standard system is defined as follows:

- 128 equalising inputs (non-reclocking)
- 128 dual reclocking outputs or 256 single reclocking outputs
- Single control
- Main and backup PSUs
- Forced air cooling
- No stack expansion (stack expansion modules not fitted)
- Remote source expansion unit fitted
- 15 RU high

Forced air cooling

Each 7 RU Eclipse frame has fitted at its left-hand edge a fan module. Air is drawn in from the left hand side of the bay and is exhausted at the right.

3.3 Front view of the Eclipse router

1 Main PSU (input frame)

2 Backup PSU (input frame)

3 Main PSU (output frame)

4 Backup PSU (output frame)

5 Crosspoint module (1 of 8)

6 Frame interface module (dual control shown)

7 Control module (dual control shown)

8 Fan module (1 of 2)

9 Blanking panel (1 RU)

10 Output module (1 of 8)

11 Input frame

12 Output frame

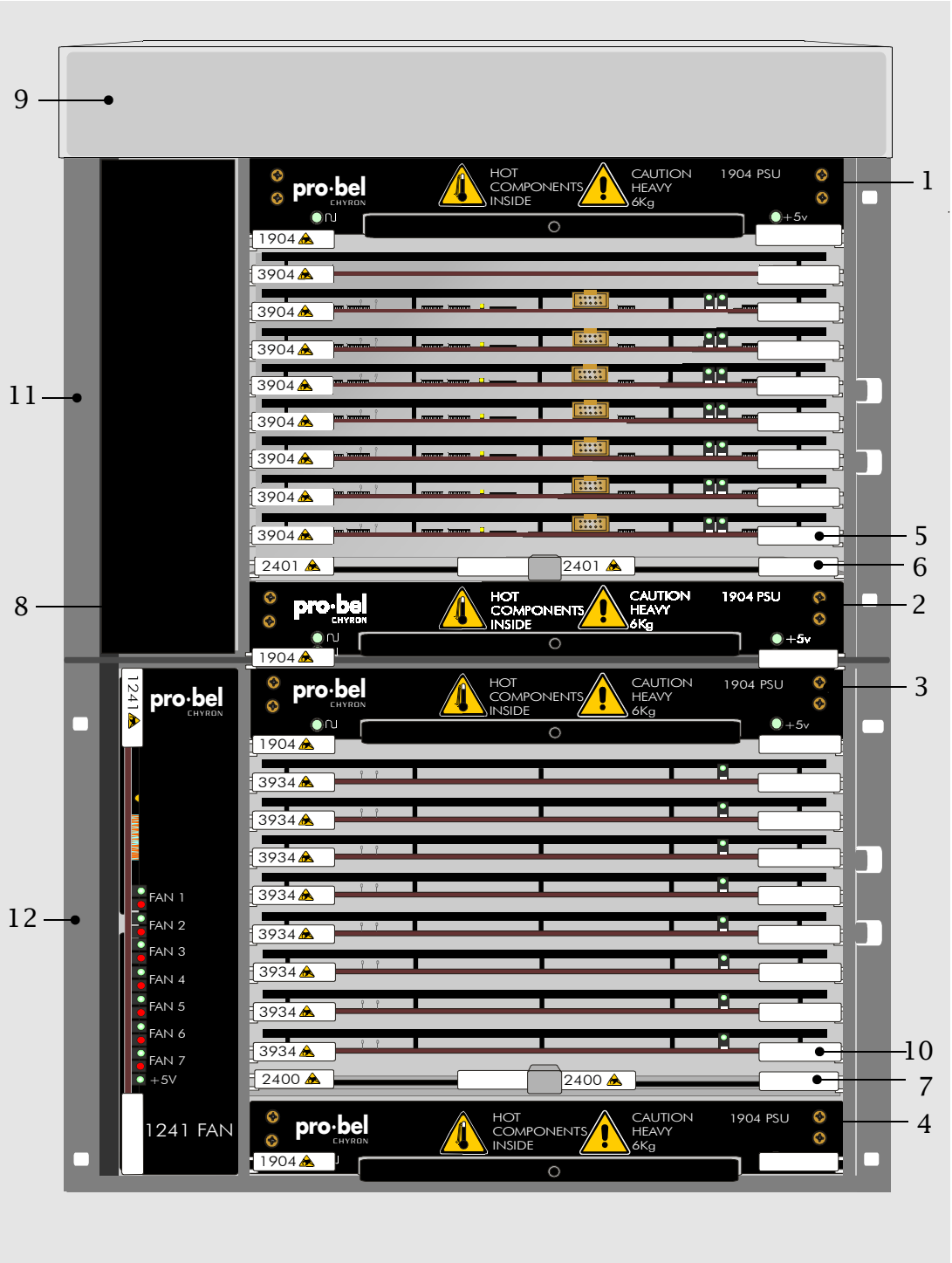
9
11
8
12
1
5
6
2
3
10
7
4
pro·bel
CHYRON
HOT COMPONENTS INSIDE
CAUTION HEAVY 6Kg
1904 PSU
+5v
1904
3904
2401
3934
2400
1241
FAN 1
FAN 2
FAN 3
FAN 4
FAN 5
FAN 6
FAN 7
+5V
1241 FAN

3.4 Rear View of the Eclipse Router

1 Input BNC connector (128 off)

2 Output BNC connector (256 off)

3 Control connector panel

4 Connector panel for second block of 128 destinations (blank panel fitted on single 256 output frame)

5 Remote source frame expansion unit

6 Main IEC connector

7 Backup IEC connector

8 Fan fail/PSU alarm connector

9 Fuse holder with spare fuse

10 Frame address switch

11 Input module (32 off)

12 Stack expansion module position (8 off shown. note: a blank panel is usually fitted here on the standard Eclipse router)

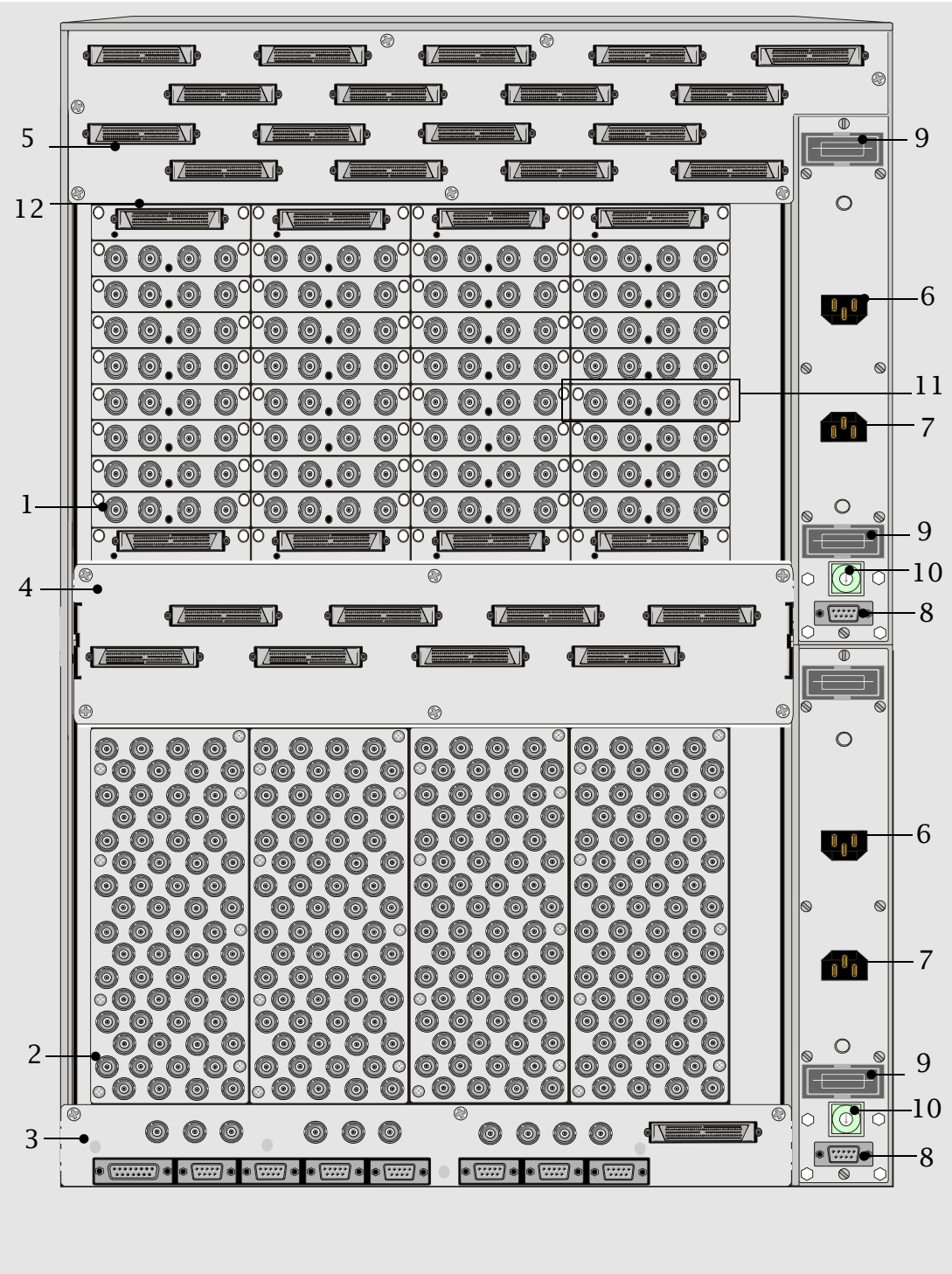
5
12
1
4
2
3
9
6
11
7
9
10
8
6
7
9
10
8

3.5 Modules used in Eclipse

We have already briefly mentioned the Eclipse fan and PSU modules. These are described in more detail in the following section. Other modules including input, crosspoint and output modules are also described in this section.

3.6 Types of input module

The Eclipse router has two types of input module as follows:

- Standard (Equalising - non reclocking) 3926
- Reclocking 3925

Both modules carry a transient suppression diode which protects the card allowing it to be "hot-plugged". Each module has a resettable fuse, so in the unlikely event of a fault on the card or of foreign material producing a short circuit the card shuts down without affecting the rest of the system. Once the fault is rectified the fuse resets eliminating the need to replace it.

LED power indication is visible through a window in the label.

The input modules can be identified by the module number, which appears on the label. An example of a standard input module (module 3926) is shown below.

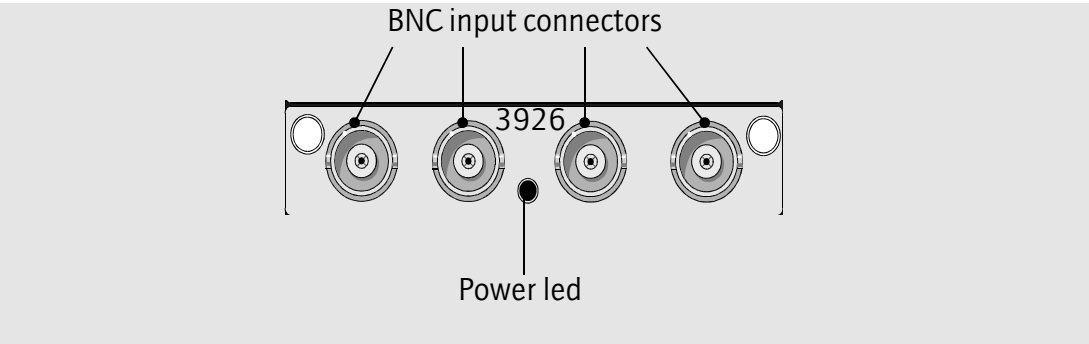

No user adjustment is required or is possible on the input modules.

Standard input module 3926

This four channel module provides superlative video performance in the majority of installations and offers equalisation for up to 300 metres of:

- PSF 1/2
- Belden 8281
- An equivalent high quality cable

Reclocking input module 3925

Reclocking cards may be required in systems where:

- there is considerable interference from other equipment in the area
- long cable runs are widely used
- the source signal is known to be jittery (possibly from old equipment)

It may be necessary to use reclocking cards in large expanded Eclipse systems.

Fitting and removing input modules

Input modules are fitted at the rear of the input frame. Up to thirty two, four channel modules may be fitted to one frame providing 128 sources. An input frame can be sub-equipped in multiples of four inputs. The input modules are located in guides and secured using snap-lock fasteners. When fitting please note the following:

- Be careful to align the module in the guides
- Don't use excessive force
- Ensure the module is fully engaged
- Check the green LED is lit
- Push the snap-lock fasteners in to lock the module after it is fully engaged

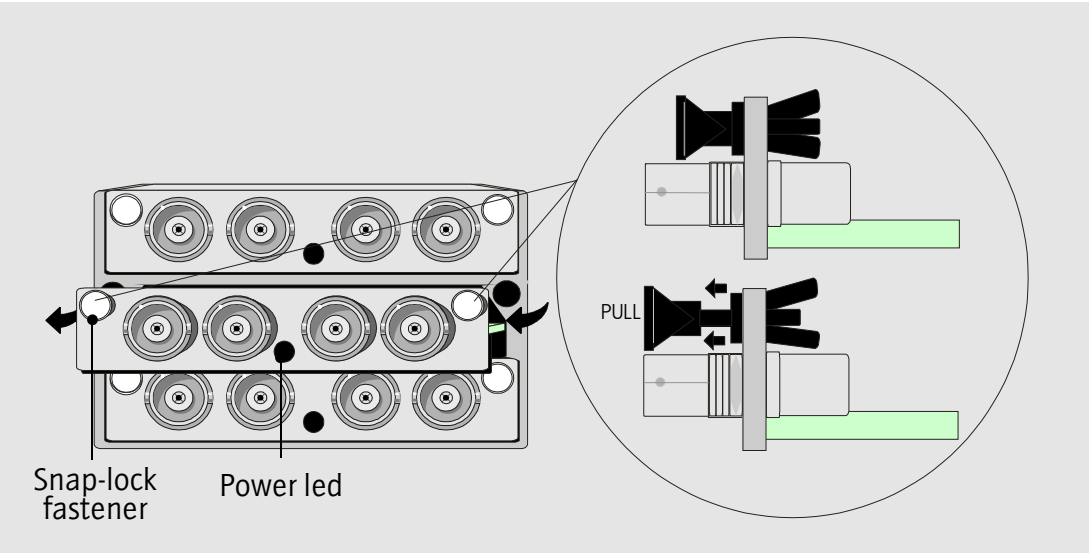

To remove the module:

- First release the snap-lock fasteners by pulling on the pegs
- Remove the module by pulling on the BNC connectors while gently moving the module left and right

3.7 Arrangement of crosspoint modules

The 3904 is the only type of Eclipse crosspoint module:

- 64 x 64

The advanced design of this module is a major contributor to Eclipse's unrivalled density per RU.
The module incorporates a transient suppression diode which protects the card allowing it to be hot-plugged. It is also fuse-protected.
Up to eight modules may be fitted to one input frame providing 128 x 256 destinations.
The 'hello' led on the card edge indicates that the module is being addressed by the control system.

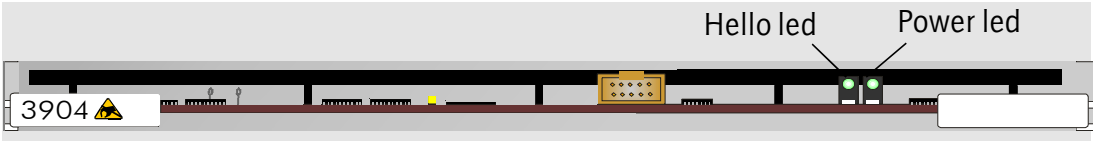

The arrangement of modules within a single frame is shown in the table below.

Crosspoint position	Source	Destination
Top of frame (Slot 8)	65 - 128	193 - 256
	65 - 128	129 - 192
	65 - 128	65 - 128
	65 - 128	1 - 64
	1 - 64	193 - 256
	1 -64	129 - 192
	1 - 64	65 - 128
Bottom of Frame (Slot 1)	1 - 64	1 - 64

This is discussed in detail in chapter 5 - Configuration.

Fitting and removing crosspoint modules

Crosspoint modules are fitted and removed from the front of the input frame.

When fitting or removing these modules please note the following:

- Be careful to align the module in the guides
- Remove and refit the module by means of ejectors in the same way as the PSU

Due to the high density connector, some force is required to fit the crosspoint modules. Ensure that this is applied evenly to both ejectors.

A guiding system is incorporated with the connector to guarantee pin alignment.

Make sure that the module is pushed fully home.

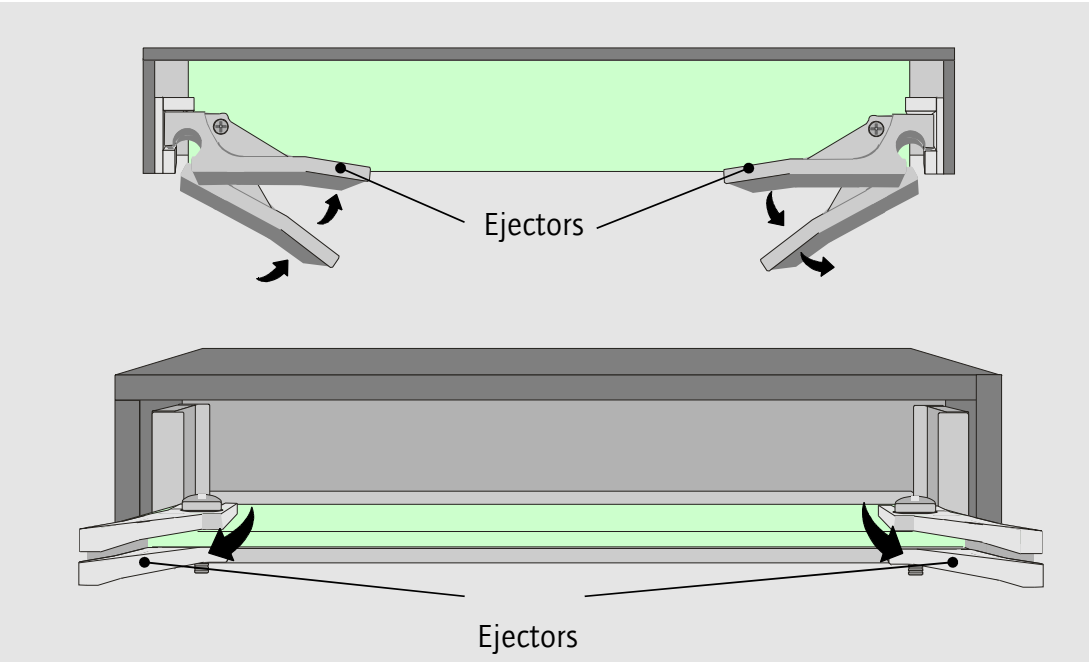

3.8 Types of output module

The Eclipse router has two types of output module:

- 16 channel dual output
- 32 channel single output

Both modules feature transient suppression diodes which protect the card allowing hot-plugging. They are also fuse protected.

Sixteen channel dual output module 3934

Each module has sixteen non-inverting (output A) and sixteen inverting outputs (output B). Dual output routers may be sub-equipped in multiples of sixteen outputs.

	Output module	Output number
Top of frame (slot 8)	8	128----------114,113
	7	112----------98,97
	6	96----------82,81
	5	80----------66,65
	4	64----------50,49
	3	48----------34,33
	2	32----------18,17
Bottom of frame (slot 1)	1	16 ----------2,1

Thirty two channel single output module 3935

All outputs on this module are non-inverting relative to the input. Due to the architecture of the Eclipse system, each single output card carries destinations:

- n to n+15
- (n+128) to (n+128)+15

For example, destinations 1 to 16 and 129 to 144 for a card fitted in slot 1.

	Output module	Output number
Top of frame (Slot 8)	8	256----------242,241 128----------114,113
	7	240----------226,225 112----------98,97
	6	224----------210,209 96----------82,81
	5	208----------194,193 80----------66,65
	4	192----------178,177 64----------50,49
	3	176----------162,161 48----------34,33
	2	160----------146,145 32----------18,17
Bottom of frame (Slot 1)	1	144----------130,129 16 ----------2,1

The numbering pattern shown above is the actual arrangement of outputs looking at the rear of the frame i.e. Output 1 is at the bottom right and output 256 at the top left.

Furthermore this means that sub-equipping between 128 and 256 outputs using 3935 is not feasible.

Fitting and removing output modules

Output modules are fitted at the front of the output frame in exactly the same way as crosspoint modules are fitted in the input frame. Up to eight, thirty two channel modules may be fitted to one output frame providing 256 destinations.

3.9 Other Eclipse modules

Control module (2404)

The control cards are fitted at the front of the output frame.
Each control module and has an 8 character alphanumeric display.
The control module features a menu system which may be navigated using the buttons situated adjacent to the alphanumeric display.
Control modules are fitted and removed from the frame using ejectors in the same way as crosspoint cards.

Frame interface module (2405)

Frame interface modules are fitted at the front of each input frame.
Frame interface modules handle control and monitoring for the input frame and communicate control information to the control module situated in the output frame.

For dual output systems the local destination frame (outputs 1-128) is fitted with a control module whilst the remote destination frame (outputs 129-256) is fitted with a frame interface module.

For detailed information regarding control module and frame interface module operation please refer to Chapter 5.

PSUs (1904)

The PSU is a single integrated unit.
Front panel indication of mains (line input) status and internal five volt status is provided by means of green leds. PSU status is monitored by the control system.
Alarm relay contacts are also available on the rear of the frame.
Line input voltage is auto-sensing and no user adjustment of the PSU is required.

Fan module (1241)

The Fan module features seven high-performance DC fans.
Four fans provide cooling for the modules fitted in the front of the frame and three provide cooling for the input models at the rear of the input frame.

Fan module status is provided on the module edge by means of leds.

Additionally, alarm relay contacts are available at the rear of the frame and fan status is monitored by the control system.

In order to minimise inrush current when the fan module is powered up it features phased start up. Two fans start after approximately 0.5 seconds, 2 more after about 1 second and the final three after around 1.5 seconds. The fans can take several seconds to get up to operating speed so the status leds will initially indicate fan failure on power up.

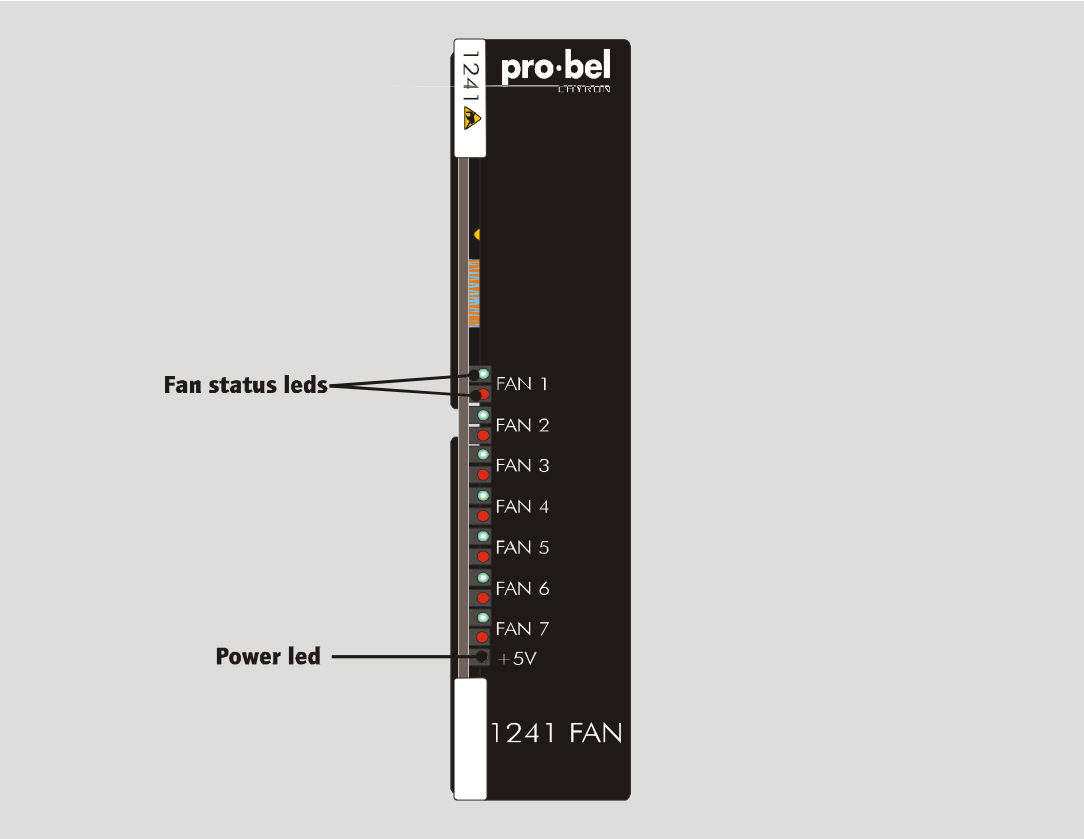

3.10 Standard Eclipse router diagram

In the next section we will go on to examine enhanced Eclipse routers. By way of a summary to this section, standard Eclipse routers are:

- 128 x 128 dual output
- 128 x 256 single output

This is shown diagrammatically below.

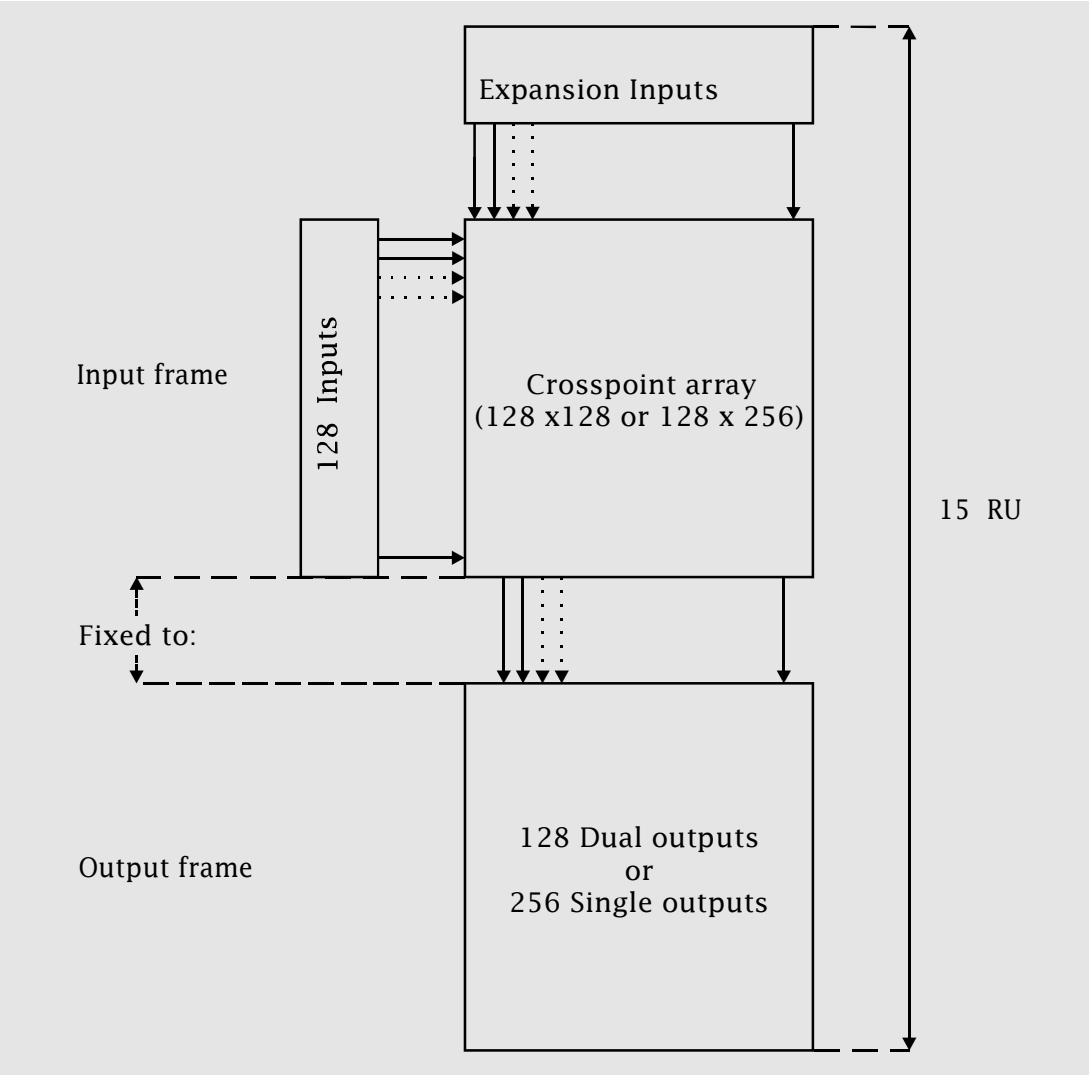

4 Building larger routers

In order to build Eclipse routers larger than 128 x 128 dual outputs or 128 x 256 single outputs, or to expand Eclipse systems, it is necessary to add input or output frames.

There are three methods of creating enhanced Eclipse routers:

- Adding dual outputs up to 256
- Adding extra sources (expanding a stack)
- Adding outputs above 256 (adding more stacks)

For the third expansion type, adding more stacks, two other module types are used:

- Sixteen channel stack expansion module (3916)
- Four channel expansion input modules (3914 and 3915)

4.1 Adding dual outputs up to 256

This is the simplest form of enhanced Eclipse router. The requirements are:

- The connection of eight signal cables from the standard (128 x 128) Eclipse router to the remote destination frame
- Four additional crosspoint cards housed in the input frame
- E bus cable connection from the standard (128 x 128) Eclipse router to the remote destination frame

The eight interconnecting cables (125224) are fitted between the 2 RU panel situated in the centre of the standard Eclipse router rear panel and the 1 RU panel at the top of the remote destination frame.

The four additional crosspoint modules are fitted in slots 3,4,7 and 8.

The E bus cable (125225) connection is fitted from the control connector panel at the bottom of the standard (128 x 128) Eclipse router to the 1 RU panel at the top of the remote destination frame.

Standard signal cables are 1 metre in length and are fitted with multiway screwlock sockets. These mate with the multiway plugs on the frames.

The E bus cable is similar but fitted with latching plugs rather than screwlock sockets. These mate with the multiway sockets on the frames.

The 2 RU panel in the centre of the standard Eclipse router rear panel is shown below.

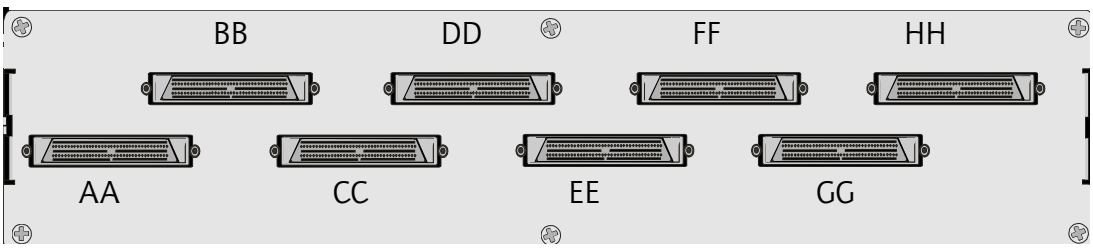

The 1 RU panel at the top of the remote destination frame is shown below.

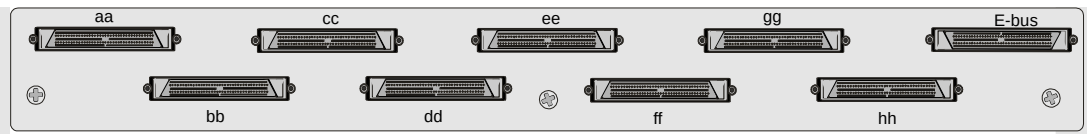

The control connector panel at the bottom of standard Eclipse router is shown below.

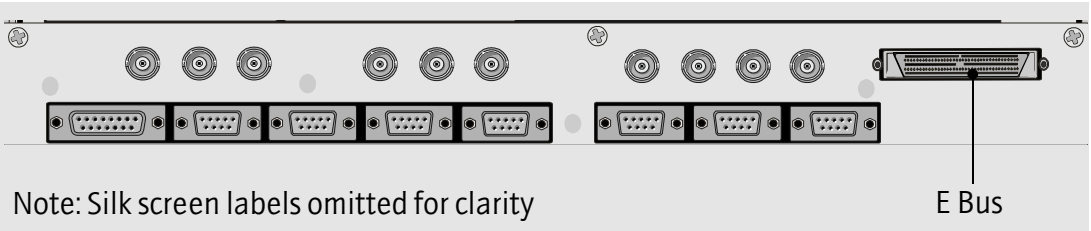

Note: The remote destination frame is fitted with a frame interface module (or modules) in its control module position. This is the only instance where a frame interface module is fitted in an output frame. In this situation, a blanking panel is fitted rather than a control connector panel.

The panel connections are shown in the diagram on the next page.

Adding dual outputs up to 256 to the standard Eclipse router:

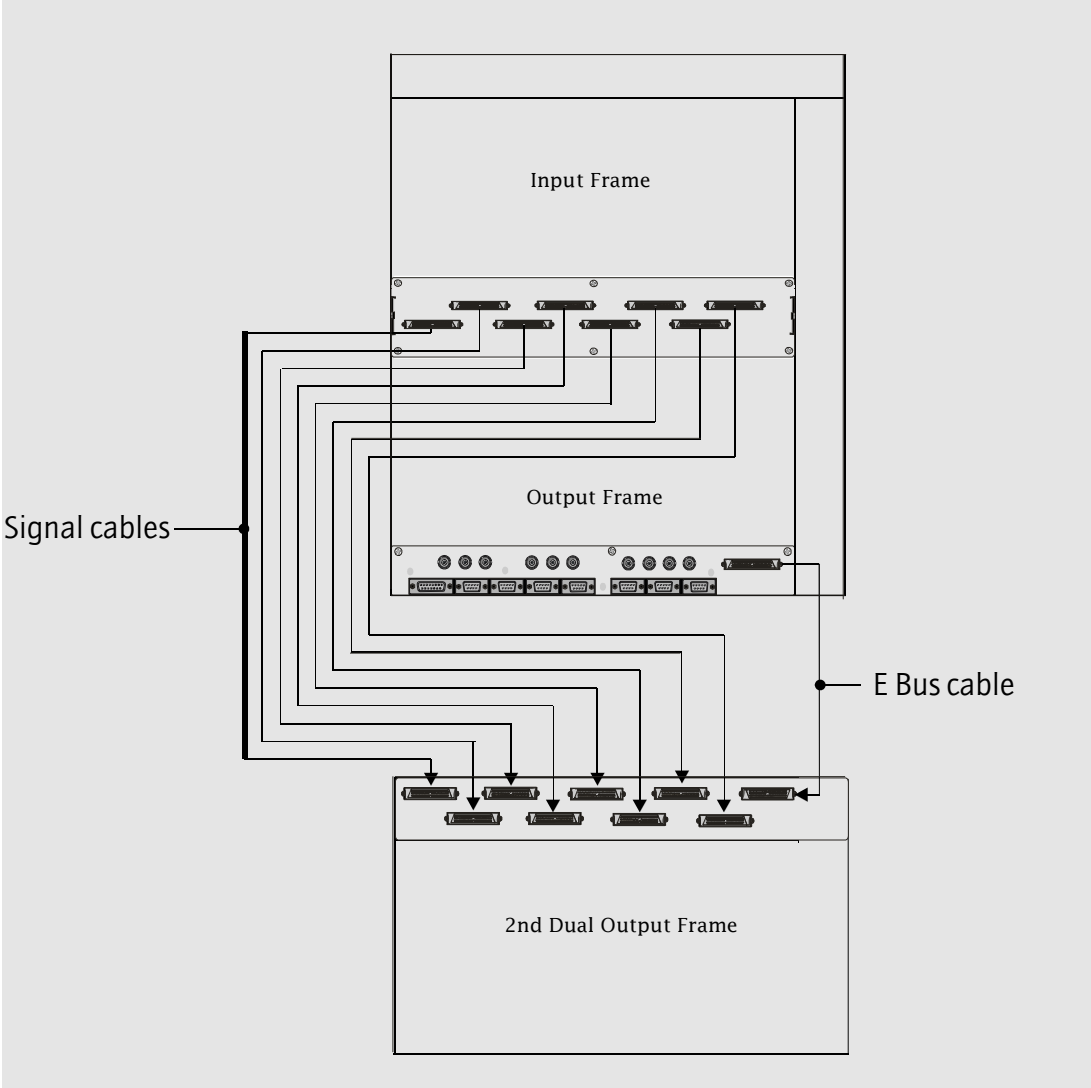

For details of outputs carried by each connection please see the table on the next page.

Output connections between a standard Eclipse router and a remote destination frame:

Cable connections	
Connection	**Outputs connected**
AA -> aa	143,144,159,160,175,176,191,192,207,208,223,224,239,240,255,256
BB -> bb	141,142,157,158,173,174,189,190,205,206,221,222,237,238,253,254
CC -> cc	139,140,155,156,171,172,187,188,203,204,219,220,235,236,251,252
DD -> dd	137,138,153,154,169,170,185,186,201,202,217,218,233,234,249,250
EE -> ee	135,136,151,152,167,168,183,184,199,200,215,216,231,232,247,248
FF -> ff	133,134,149,150,165,166,181,182,197,198,213,214,229,230,245,246
GG -> gg	131,132,147,148,163,164,179,180,195,196,211,212,227,228,243,244
HH -> hh	129,130,145,146,161,162,177,178,193,194,209,210,225,226.241,242
E bus -> E bus	Control

All cables must be fitted even if less than 256 outputs are being added.

4.2 Adding extra sources

The architecture of the Eclipse router allows up to 1024 sources in one stack. Sources are added by means of extra 7 or 15 RU input frames. Each of these frames may have up to 128 or 256 extra inputs, respectively. Note there are options for 128 input (in 7 or 8 RU) and 256 input (in 14 or 15 RU) versions.

There are two methods of adding sources to a stack:

- Adding local source frames
- Adding remote source frames

Adding local source frames

This is the preferred method. Frames are located one above the other in a bay and are connected by means of internal ribbon cables. Once installed, a 2 RU blanking panel is fitted to the rear of the frame, protecting the cables.

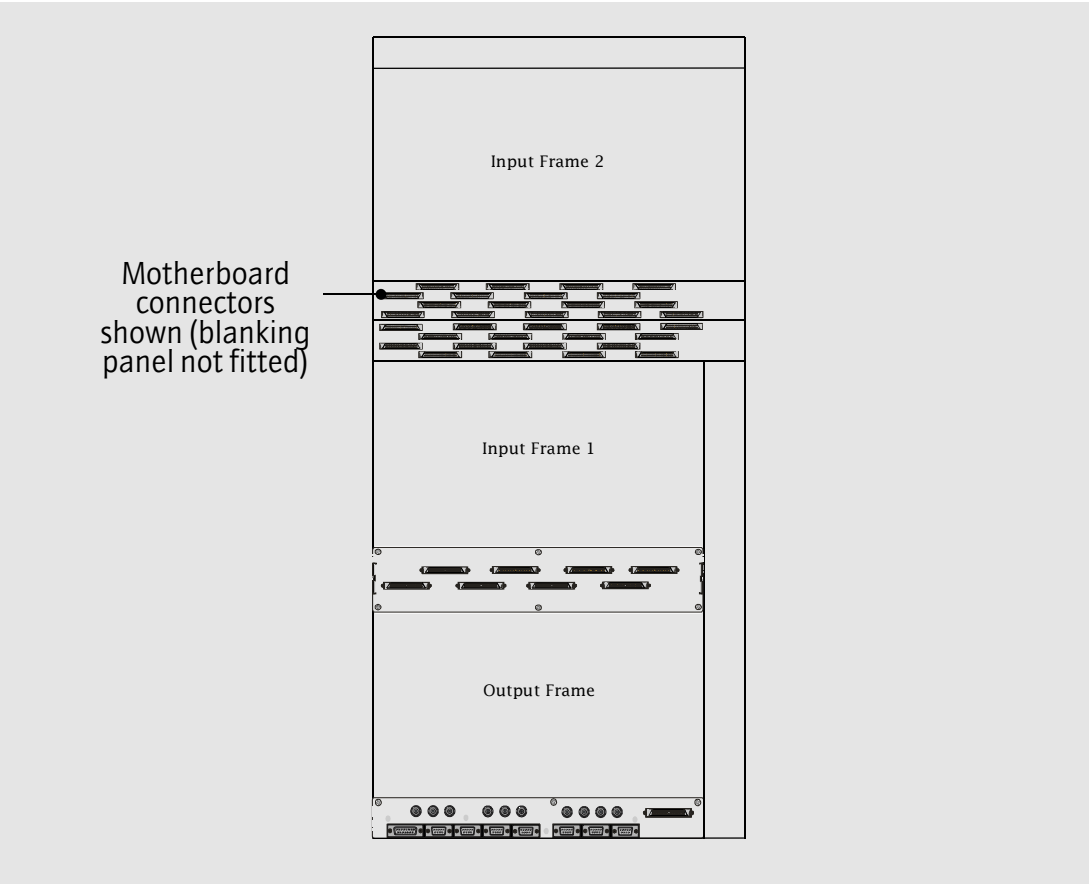

NOTE: Due to internal power distribution, it is recommended that this type of expansion is only undertaken with the router powered down.

The ribbon cable connections are shown in the diagram below:

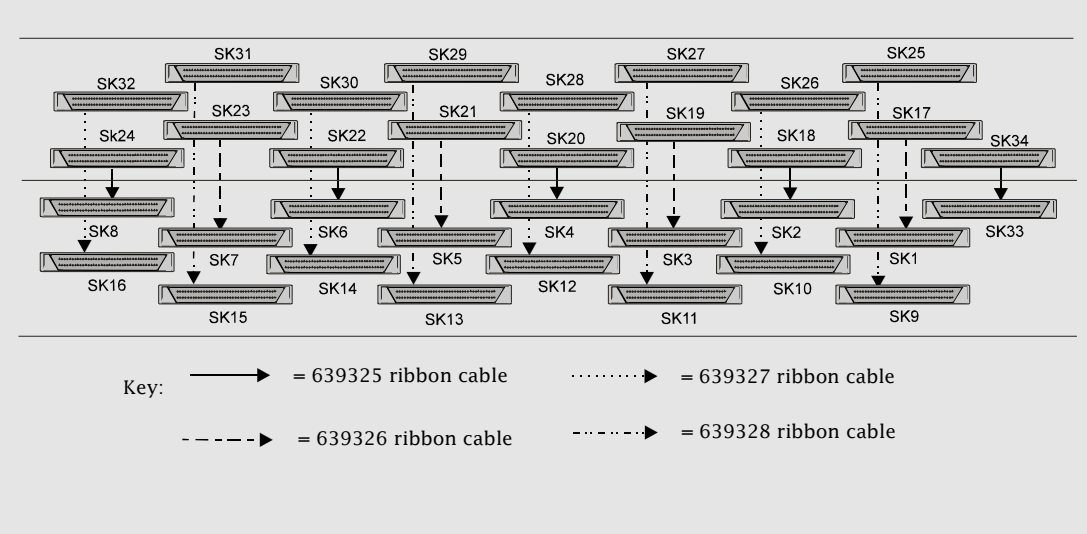

For details of outputs carried by each ribbon cable please see the table on the next page

The order of fitting is as follows:

- 639325
- 639326
- 639327
- 639328

The ribbon cables connecting local source frames carry the following inputs:

Ribbon cable connection			
Ribbon cable used	6393 socket first frame	6393 socket Second frame	**Connect to destinations**
639325	SK33	SK 34	Control
639325	SK2	SK18	3,4,19,20,35,36,51,52,67,68,83,84,99,100, 115,116
639325	SK4	SK20	7,8,23,24,39,40,55,56,71,72,87,88,103,104, 119,120
639325	SK6	SK22	11,12,27,28,43,44,59,60,75,76,91,92,107, 108,123,124
639325	SK8	SK24	15,16,31,32,47,48,63,64,79,80,95,96,111, 112,127,128
639326	SK1	SK17	1,2,17,18,33,34,49,50,65,66,81,82,97,98, 113,114
639326	SK3	SK19	5,6,21,22,37,38,53,54,69,70,85,86,101,102, 117,118
639326	SK5	SK21	9,10,25,26,41,42,57,58,73,74,89,90,105,106, 121,122
639326	SK7	SK23	13,14,29,30,45,46,61,62,77,78,93,94,109, 110,125,126
639327	SK10	SK26	131,132,147,148,163,164,179,180,195,196, 211,212,227,228,243,244
639327	SK12	SK28	135,136,151,152,167,168,183,184,199,200, 215,216,231,232,247,248
639327	SK14	SK30	139,140,155,156,171,172,187,188,203,204, 219,220,235,236,251,252
639327	SK16	SK32	143,144,159,160,175,176,191,192,207,208, 223,224,239,240,255,256
639328	SK9	SK25	129,130,145,146,161,162,177,178,193,194, 209,210,225,226,241,242
639328	SK11	SK27	133,134,149,150,165,166,181,182,197,198, 213,214,229,230,245,246
639328	SK13	SK29	137,138,153,154,169,170,185,186,201,202, 217,218,233,234,249,250

All ribbon cables must be fitted.

4.3 Adding remote source frames

This method may be used for field expansion or in large systems where there are more source frames than can physically fit into a bay. This can only be achieved if the main frame is fitted with a remote source frame expansion unit.

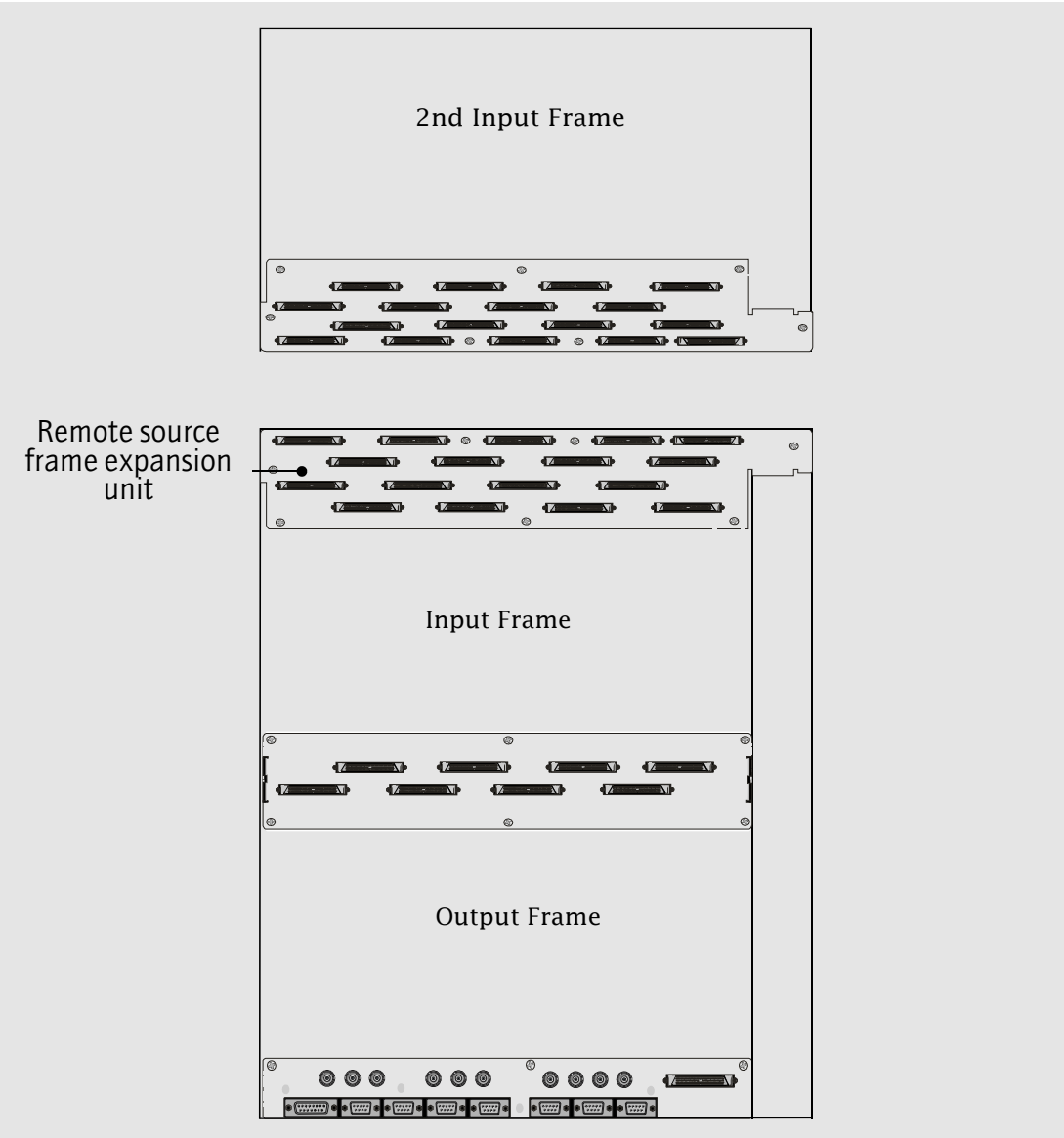

The cable connections between the remote source expansion unit and the second input frame are shown in the diagram below.

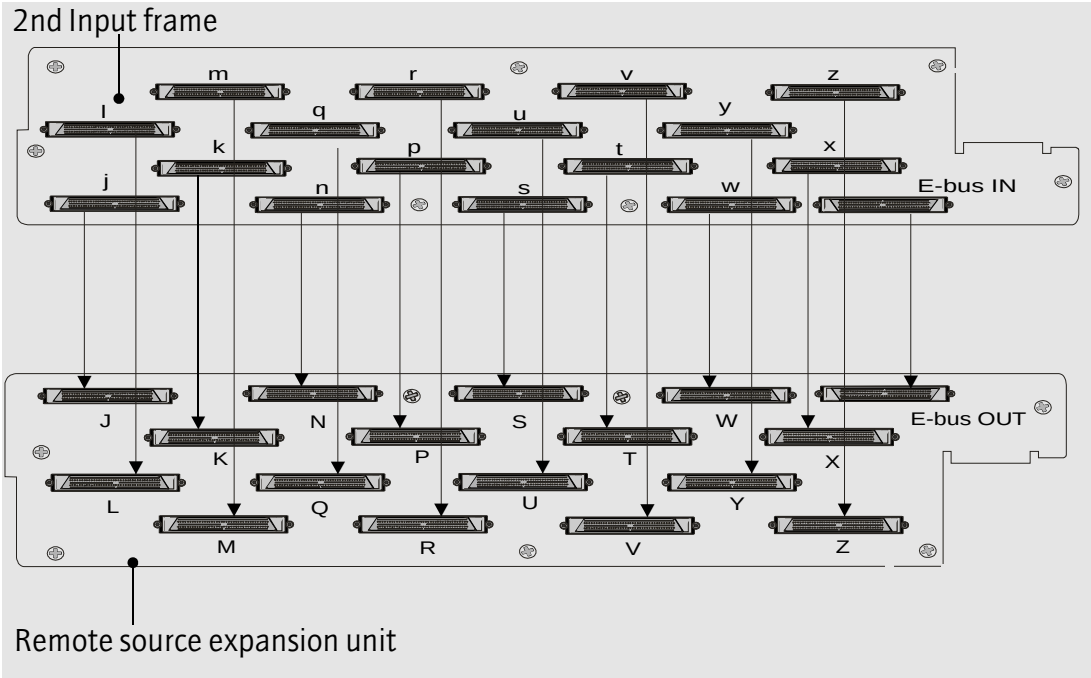

For details of cables and connections see the table on the next page.

Cable connections	
Connection	**Connect to destinations**
J -> j	15,16,31,32,47,48,63,64,79,80,95,96,111,112,127,128
K -> k	13,14,29,30,45,46,61,62,77,78,93,94,109,110,125,126
L -> l	143,144,159,160,175,176,191,192,207,208,223,224,239,240,255,256
M -> m	141,142,157,158,173,174,189,190,205,206,221,222,237,238,253,254
N -> n	11,12,27,28,43,44,59,60,75,76,91,92,107,108,123,124
P -> p	9,10,25,26,41,42,57,58,73,74,89,90,105,106,121,122
Q -> q	139,140,155,156,171,172,187,188,203,204,219,220,235,236,251,252
R -> r	137,138,153,154,169,170,185,186,201,202,217,218,233,234,249,250
S -> s	7,8,23,24,39,40,55,56,71,72,87,88,103,104,119,120
T -> t	5,6,21,22,37,38,53,54,69,70,85,86,101,102,117,118
U -> u	135,136,151,152,167,168,183,184,199,200,215,216,231,232,247,248
V -> v	133,134,149,150,165,166,181,182,197,198,213,214,229,230,245,246
W -> w	3,4,19,20,35,36,51,52,67,68,83,84,99,100,115,116
X -> x	1,2,17,18,33,34,49,50,65,66,81,82,97,98,113,114
Y -> y	131,132,147,148,163,164,179,180,195,196,211,212,227,228,243,244
Z -> z	129,130,145,146,161,162,177,178,193,194,209,210,225,226,241,242
E Bus In -> E Bus OUT	Control

The 16 signal cables are of the type 124724.
The E Bus cable is of the type 124725.

Standard remote source cables are 5 metres in length. Up to two 5 metre cables may be used in an expanded system allowing a stack to be distributed across 3 bays.

All cables must be fitted.

4.4 Adding more stacks

The crosspoint arrangement in Eclipse allows any number of sources (up to 1024) to feed a maximum of 256 destinations. To expand beyond 256 destinations it is necessary to add further stacks.

Traditionally this type of expansion has been achieved using distribution amplifiers (DAs) as shown in the example below.

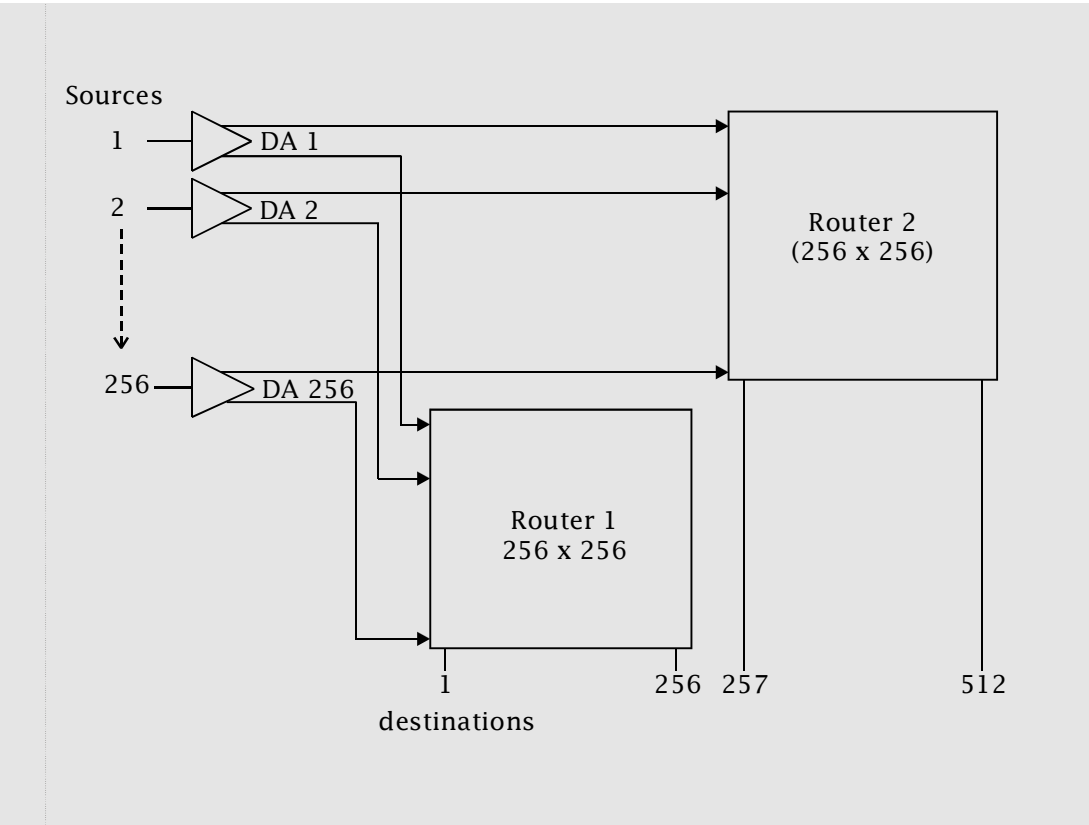

Using Eclipse, external DAs are no longer required. This is because all of the sources of a router (router 1) may be made available to another router (router 2) simply by fitting stack expansion output modules.

4.5 Stack expansion modules

There are 3 types of stack expansion module as follows:

- 16 channel stack expansion output module 3916
- 4 channel (equalising - non-reclocking) expansion input module 3914
- 4 channel reclocking expansion input module 3915

Stack expansion output module 3916

These modules take the input signals applied to the local crosspoint cards (in blocks of 16) and buffer them out to the rear panel where they may be joined (by means of cables) to a second stack.

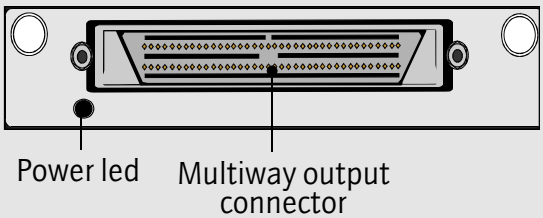

Stack expansion input module 3914

This module is used in conjunction with the expansion output module 3916. It is designed to receive inputs from the first stack in a system via Pro-Bel stack expansion (breakout) cables.

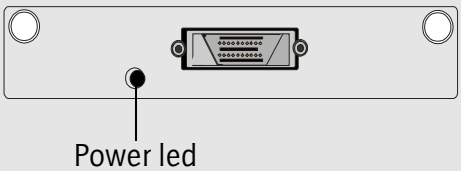

Reclocking expansion input module 3915

This module is identical to the 3914 but provides additional signal reclocking for use in large systems.

4.6 Fitting & removing stack expansion modules

These modules are fitted in the same way as standard input modules:

- Be careful to align the module in the guides
- Don't use excessive force
- Ensure the module is fully engaged
- Check the green LED is lit
- Push the snap-lock fasteners in to lock the module after it is fully engaged

To remove the module:

- First release the snap-lock fasteners by pulling on the pegs
- It is easier to remove a module by pulling on the mating cable shell prior to cable disconnection
- Ensure that the cable shell screws locks are fully tightened before using this method
- Disconnect the cable after the module is free

Never pull on the cable itself.

4.7 Arrangement of stack expansion modules

Location of stack expansion output modules

Stack expansion output modules are fitted at the rear of the frame (first stack) in the positions shown:

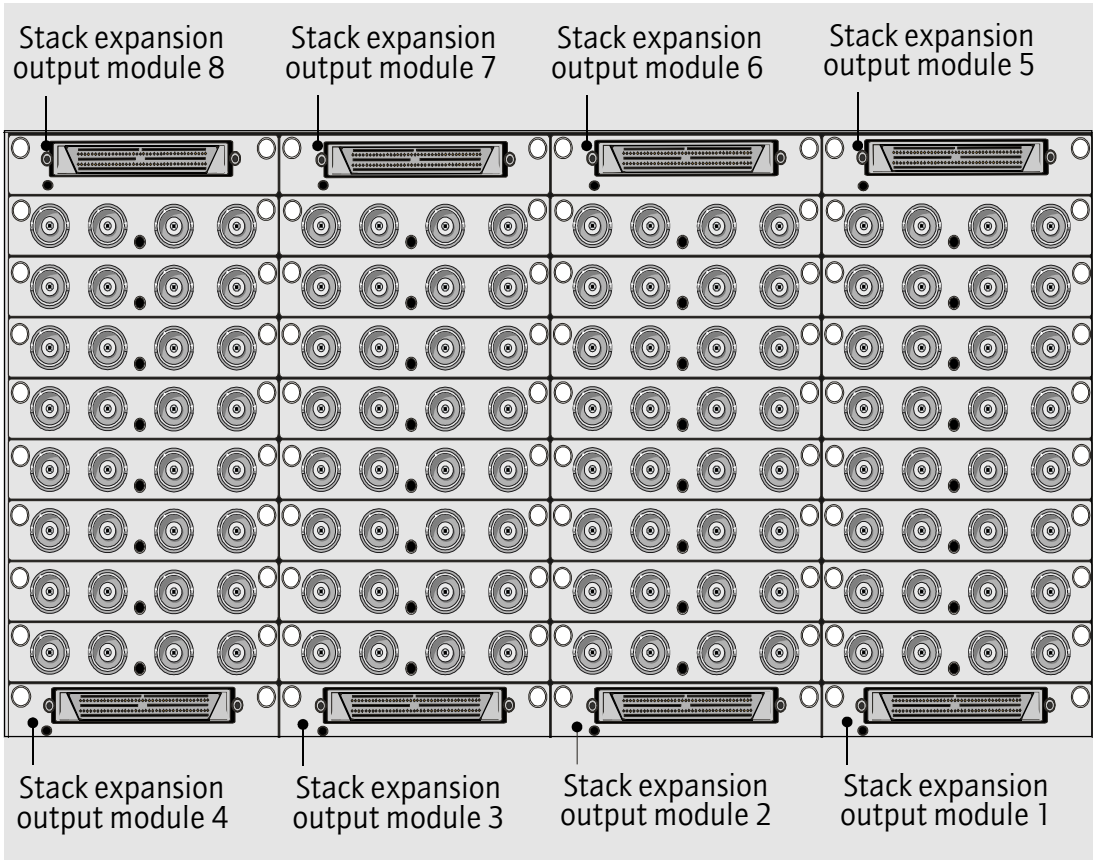

Up to 8 modules may be fitted giving 128 expansion sources per input frame.

Expansion cable arrangement

Stack expansion input modules are fitted in place of standard input modules in the second (and third and fourth) stacks.
Note: 3916 stack expansion modules can be fitted in stacks 2 and 3, enabling further expansion to stacks 3 and 4 respectively.

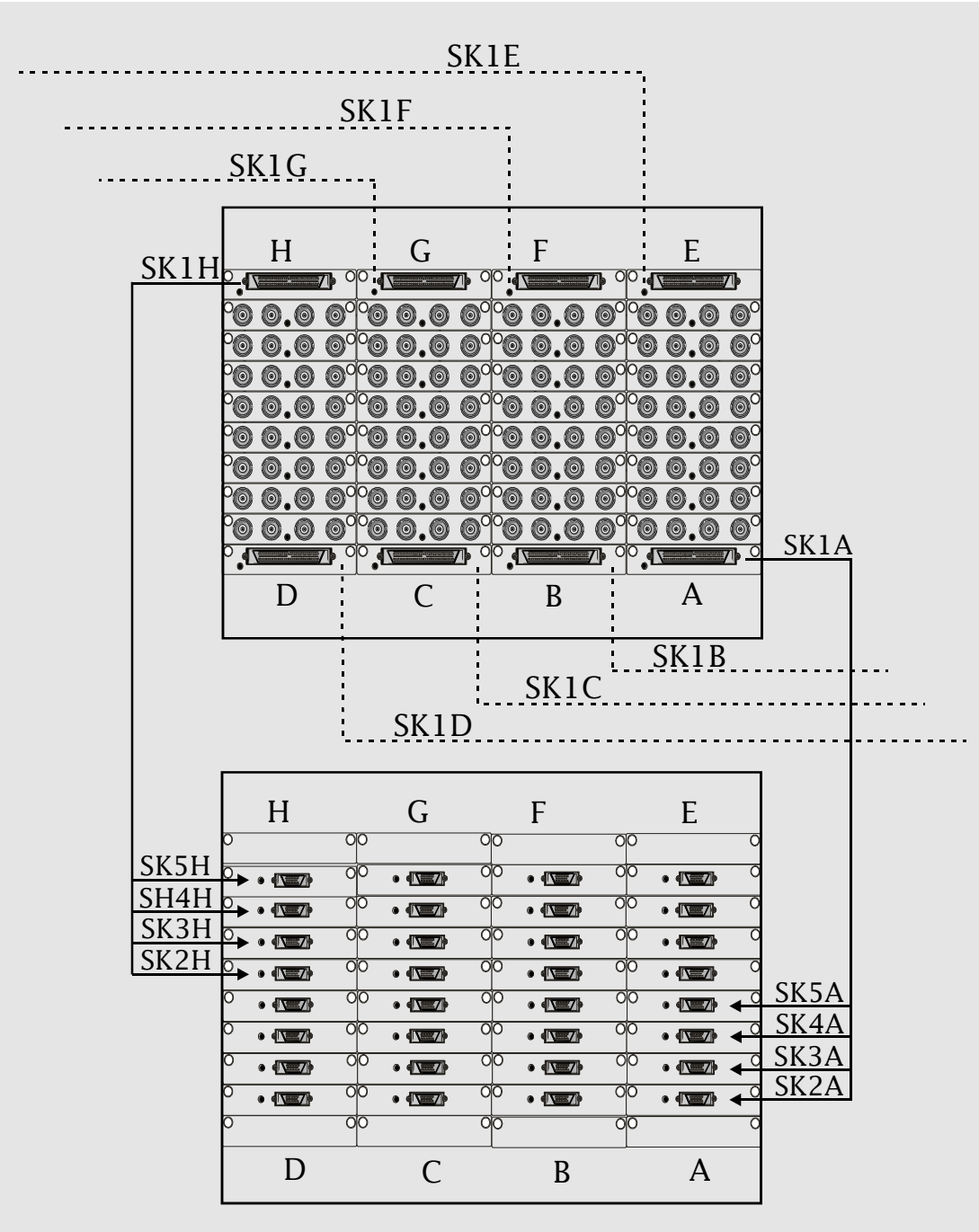

The cable connections are as follows:

Cable connections are			
Cable number	**From**	**To**	**Sources connected**
1	SK1A	SK2A Brown	1-4
		SK3A Red	17-20
		SK4A Orange	33-36
		SK5A Yellow	49-52
2	SK1B	SK2B Brown	5-8
		SK3B Red	21-24
		SK4B Orange	37-40
		SK5B Yellow	53-56
3	SK1 C	SK2C Brown	9-12
		SK3C Red	25-28
		SK4C Orange	41-44
		SK5C Yellow	57-60
4	SK1D	SK2D Brown	13-16
		SK3D Red	29-32
		SK4D Orange	45-48
		SK5D Yellow	61-64
5	SK1E	SK2E Brown	65-68
		SK3E Red	81-84
		SK4E Orange	97-100
		SK5E Yellow	113-116
6	SK1F	SK2F Brown	69-72
		SK3F Red	85-88
		SK4F Orange	101-104
		SK5F Yellow	117-120
7	SK1G	SK2G Brown	73-76
		SK3G Red	89-92
		SK4G Orange	105-108
		SK5G Yellow	121-124
8	SK1H	SK2H Brown	77-80
		SK3H Red	93-96
		SK4H Orange	109-112
		SK5H Yellow	125-128

4.8 Diagrams of enhanced Eclipse routers

By way of a summary to this section here are some example block diagrams showing the recommended layouts of some large Eclipse routers:

- 1024 x 256 (one complete stack)

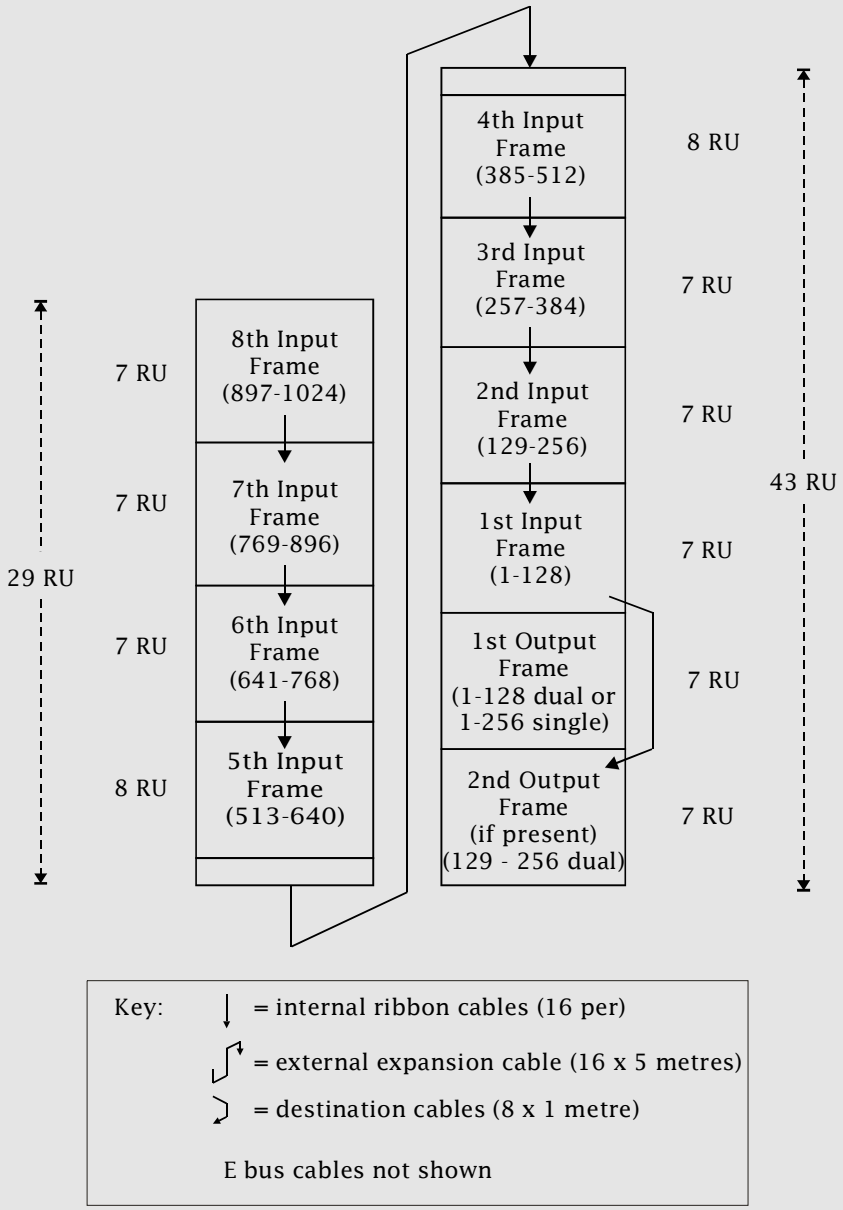

- 1024 x 512 dual outputs (two complete stacks)

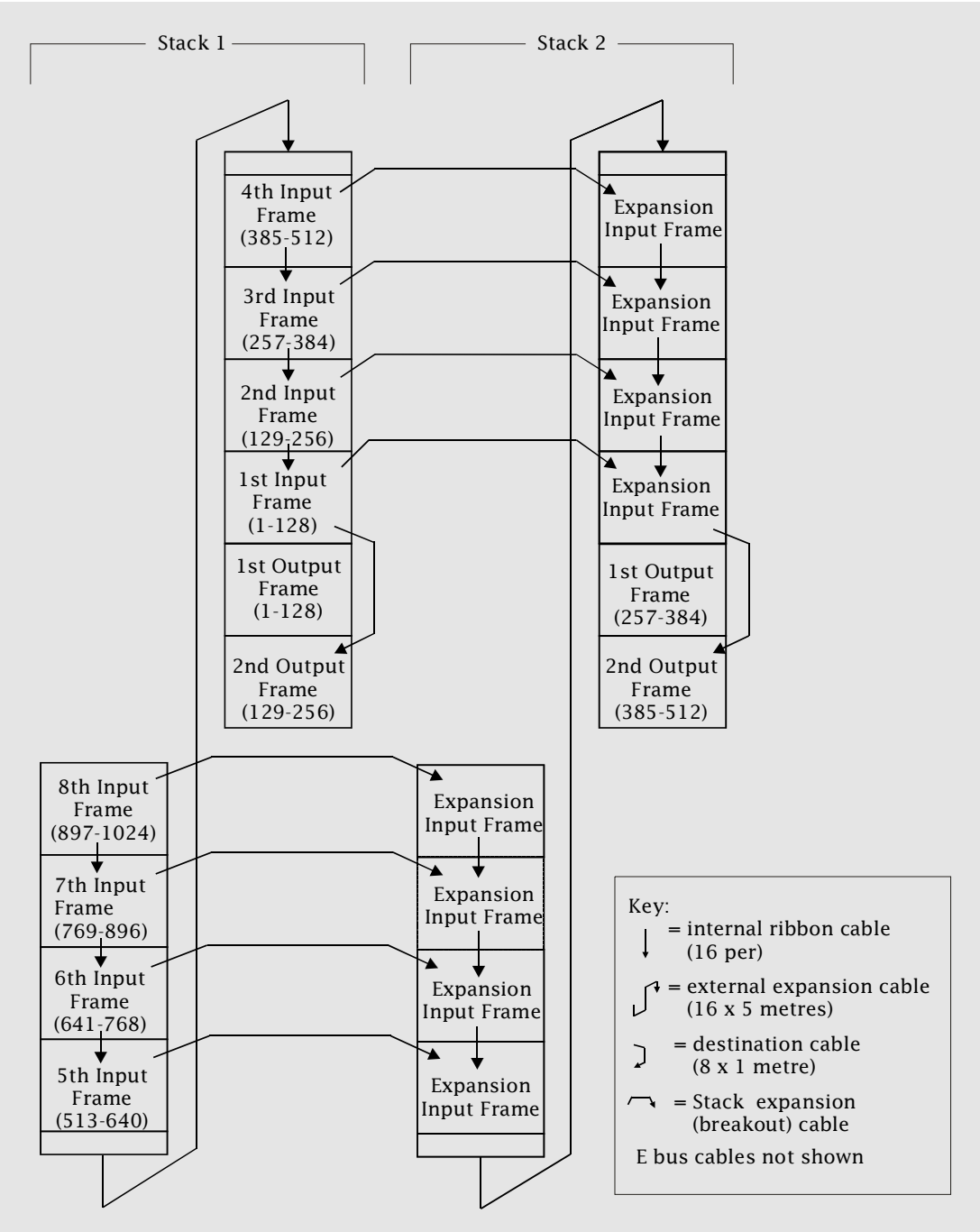

Additional stacks may be connected in the same manner in order to provide routers to a maximum size of 1024 x 1024.

5 Configuration

5.1 Types of Configuration

Setting up an Eclipse router may be considered to consist of two phases:

- Hardware configuration
- Software configuration

Hardware configuration

Ensuring that modules are fitted in the correct frames.

This involves:

- PSUs
- Fans
- Signal card modules
- Cabling
- Setting frame address

Software configuration

Ensuring that the router control is operating correctly and is communicating with the control system.

This involves:

- Firmware configuration (control card and frame interface card)
- Local configuration (via the card edge menu)
- Remote configuration (using a terminal attached to the config port)

5.2 Setting up Eclipse hardware

Important: Before proceeding with this section it is important that you have read and understood chapter 3 - System components. Additionally if you have an enhanced Eclipse router you need to have read chapter 4 - Building larger routers.

5.3 Configuring the Eclipse PSU 1904

The Eclipse PSU automatically configures itself to operate from mains input (line) voltage between:

- 90-264 Volts ac

and frequencies:

- 47-63 Hertz

No additional user set up or adjustment is required.

Fit the PSUs in the top or bottom of each 7U frame (or in both positions for main and back up operation). Connect the mains (line) input to the top (for top PSU) or bottom (for bottom PSU) IEC connector, or both, as necessary.

Setting up PSU and fan alarm monitoring

There is no requirement to set up alarm monitoring, but a connection is provided per 7U frame if it is desired to do this. Separate relay contacts are provided for each PSU and the fan module.

9 way D socket	
SK1	
1	PSU2 Relay normally open
2	PSU2 Relay normally closed
3	PSU1 Relay common
4	Fan Relay normally open
5	Fan Relay normally closed
6	PSU2 Relay common
7	PSU1 Relay normally open
8	PSU1 Relay normally closed
9	Fan Relay common

PSU1 is fitted at the topof each frame and PSU2 at the bottom. The relay states shown above are for a powered frame which is functioning correctly.

5.4 Configuring signal modules

The signal modules require no configuration or user adjustment. However it is important to ensure that all modules are present and fitted in the correct places in the frames.

The connector on the front of each crosspoint module is for factory use only.

Input module locations

These are fitted at the rear of the input frame as described in chapter 3. Physical numbering of inputs is from the bottom right of each frame to the top left as shown below.

	Input module				Sources			
Top of frame	32	31	30	29	128 - 125	124 - 121	120 - 117	116 -113
	28	27	26	25	112 - 109	108 - 105	104 - 101	100 - 97
	24	23	22	21	96 - 93	92 - 89	88 - 85	84 - 81
	20	19	18	17	80 - 77	76 - 73	72 - 69	68 - 65
	16	15	14	13	64 - 61	60 - 57	56 - 53	52 - 49
	12	10	11	9	48 - 45	44 - 41	40 - 37	36 - 33
	8	7	6	5	32 - 29	28 - 25	24 - 21	20 - 17
Bottom of frame	4	3	2	1	16 - 13	12 - 9	8 - 5	4 - 1

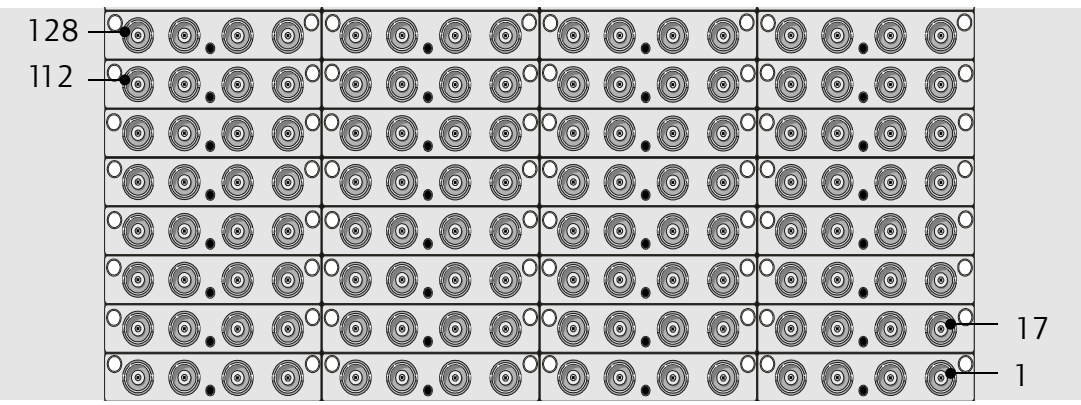

For routers larger than 128 inputs the pattern is identical

- 2 blocks of inputs 129 (bottom right) to 256 (top left)
- 3 blocks of inputs 257 (bottom right) to 384 (top left)
- etc.

Crosspoint module locations

These are fitted from the front of the input frame as described in chapter 3.

Module positions are numbered from one to eight as shown below.

Each crosspoint module routes 64 sources to 64 destinations. The actual source and destination numbers that each card connects to are shown in the table below

Crosspoint position	Source	Destination
Top of frame (Module 8)	65 - 128	193 - 256
	65 - 128	129 - 192
	65 - 128	65 - 128
	65 - 128	1 - 64
	1 - 64	193 - 256
	1 -64	129 - 192
	1 - 64	65 - 128
Bottom of Frame (Module 1)	1 - 64	1 - 64

Example of crosspoint arrangement

To make this clearer here are some examples of which crosspoint modules are fitted for particular router sizes.

Size	Modules fitted
64 x 64	Module 1 only
64 x 128	Modules 1 and 2
128 x 128	Modules 1, 2, 5 and 6
128 x 256	All modules fitted

Output module locations

These are fitted from the front of the output frame as described in chapter 3. Module positions are numbered from one to eight as shown below.

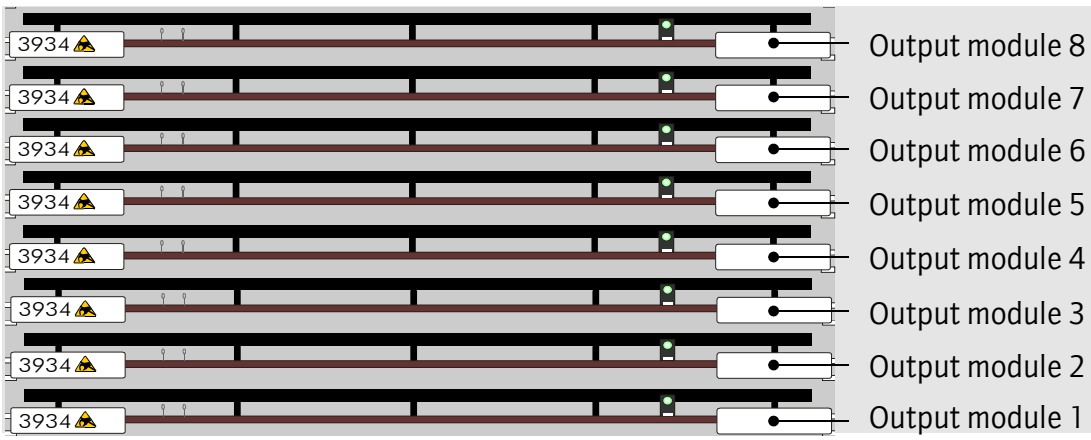

Physical numbering of outputs is from the bottom right to the top left as follows:

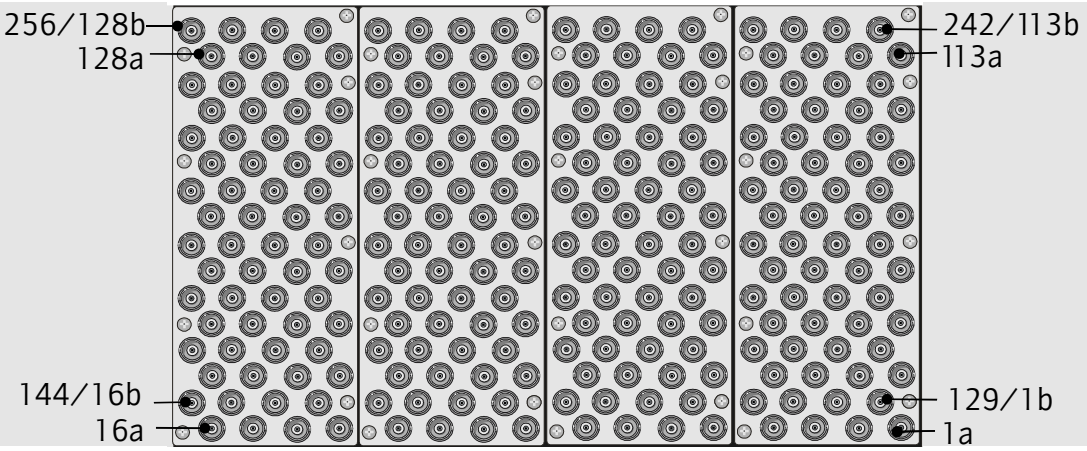

For single output configurations the frame is numbered from 1 (bottom right) to 256 (top left) as shown in the table below.

	Output module	
Top of frame (Slot 8)	8	256----------242,241 128----------114,113
	7	240----------226,225 112----------98,97
	6	224----------210,209 96----------82,81
	5	208----------194,193 80----------66,65
	4	192----------178,177 64----------50,49
	3	176----------162,161 48----------34,33
	2	160----------146,145 32----------18,17
Bottom of frame (Slot 1)	1	144----------130,129 16 ----------2,1

For dual output configurations the first frame is numbered from 1 (bottom right) to 128 (top left) and the second frame is numbered from 129 (bottom right) to 256 (top left).

	Output module	
Top of frame (Slot 8)	8	128b----------114b,113b 128a----------114,a113a
	7	112b----------98b,97b 112a----------98a,97a
	6	96b----------82b,81b 96a----------82a,81a
	5	80b----------66b,65b 80a----------66a,65a
	4	64b----------50b,49b 64a----------50a,49a
	3	48b----------34b,33b 48a----------34a,33a
	2	32b----------18b,17b 32a----------18a,17a
Bottom of frame (Slot 1)	1	16b----------2b,1b 16 a----------2a,1a

5.5 Setting frame address switches

The frame address switch is located on the rear of each frame on the right hand side close to the bottom IEC connector.

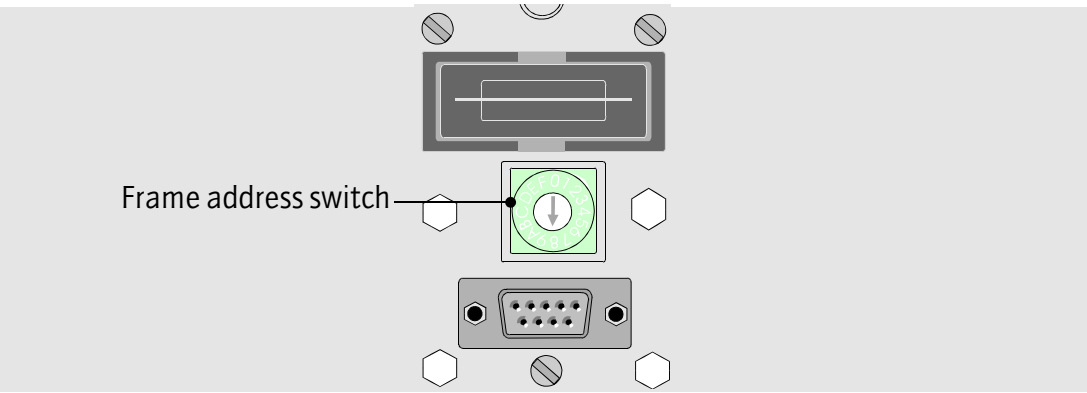

Note: If the frame address switches are not correctly set the router control will not function properly.

Input frames

Input frames have frame addresses zero to seven as shown in the table below:

Input frames Input frame number	Frame address switch	Source range
1	0	1 -128
2	1	129 - 256
3	2	257 - 384
4	3	385 - 512
5	4	513 - 640
6	5	641 - 768
7	6	769 - 896
8	7	897 - 1024

Output frames

Output frames have frame addresses 8 or 9 as shown in the table below:

Output frames		
Output frame number	**Frame address switch**	**Destination range**
1	8	1 - 128 (dual) or 1 - 256 (single)
2	9	129 - 256 (dual)

Other settings

Positions A to F are not used.

5.6 Connecting control signals

Control signals are connected to the panel at the bottom of the first output frame.

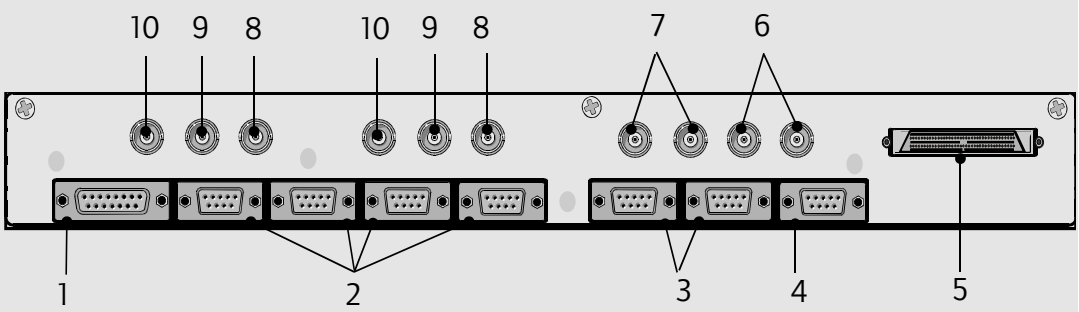

Note: Silk screen labels omitted for clarity

In total there are 19 connectors on this panel:

1 1 x Controller change over port
2 4 x Router control ports
3 2 x Controller config ports
4 1 x Timecode port
5 1 x E bus connector
6 Looping 625 reference (2 BNCs)
7 Looping 525 reference (2 BNCs)
8 2 x 625 digital reference (BNC)
9 2 x 525 digital reference (BNC)
10 2 x Standard-sensing inputs (BNC)

E Bus connector

The E Bus connector should be used with the standard cable supplied

BNC connectors

For all BNC connectors the following applies:

BNC connector	
Inner	Signal
Outer	0V

Controller change over port

The controller port connects to the change over panel with lamps for status indication and a key switch for active/idle change over.

15 way D socket

SK11	Function	Input or output
1	Low to set A active	Input
2	Low to set A idle	Input
3	A active lamp drive (Low)	Output
4	A idle lamp drive (Low)	Output
5	A fail lamp drive (Low)	Output
6	Low to set B active	Input
7	Low to set B idle	Input
8	B active lamp drive (Low)	Output
9	B idle lamp drive (Low)	Output
10	B fail lamp drive (Low)	Output
11	Not connected	
12	Not connected	
13	+5V	
14	0V	
15	0V	

Router control port

The router control port uses Pro-Bel general switcher protocol and defaults to:

- RS485
- 38,400 Baud
- 8 data bits
- 1 stop bit
- Odd parity

9 way D socket	
SK12-15	**Function**
1	0V
2	TX-
3	RX+
4	0V
5	Not connected
6	0V
7	TX+
8	RX-
9	0V

Controller config ports

There are 2 config ports (A and B) which are used for software configuration.

The protocol is as follows:

- RS232
- 9.6 KBaud
- 8 data bits
- 1 stop bit
- No parity

9 way D socket	
SK16-SK17	**Function**
1	Not connected
2	TX (A or B)
3	RX (A or B)
4	Not connected
5	0V
6	DTR (A or B)
7	CTS (A or B)
8	RTS (A or B)
9	Not connected

Timecode port

The timecode port accepts standard linear timecode (LTC).
It is intended that timed/frame accurate switching of routes will be implemented as a future product enhancement.

9 way D socket	
SK 18	Function
1	LTC+
2	Not connected
3	Not connected
4	Not connected
5	Not connected
6	LTC-
7	Not connected
8	Not connected
9	0V

5.7 Eclipse software configuration

There are 3 types of eclipse software configuration:

- Firmware configuration (control card and frame interface card)
- Local configuration (via the card edge menu)
- Remote configuration (using a terminal attached to the config port)

5.8 Firmware configuration

It is not intended that firmware configuration be altered by the user. This is for information only.

2404 Control module

Card edge controls

The card edge controls for the 2404 control module are shown below:

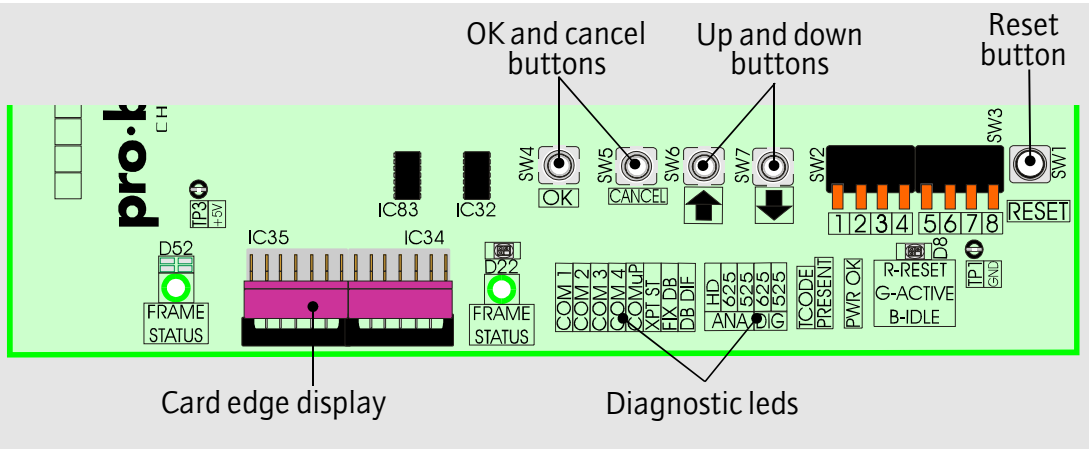

Config switches

There are 2, 4 way dual in line (DIL) switches on the 2404 control module as detailed below.

SW2 Software select

Switch	Function	Off (Up)	On (Down)
1	Boot prom selection	Main software (Flash)	Monitor software(EPROM)
2	Not used		
3	Not used		
4	Not used		

The default setting is all switches off.

SW3 Software function

Switch	Function	Off (Up)	On (Down)
5	Boot prom function	Hi-cross monitor	Test menu
6	Monitor port baud rate (Test mode)	9600 Baud	38400 Baud
7	Diagnostics	Off	On
8	Not used	Not used	Not used

The default setting is all switches off.

Jumpers and reset button

SW1 Reset button

Pressing this button causes the 2404 control module to perform a total hardware reset. When the button is released the module reboots.

Jumpers

There are 2 jumpers on the 2404 control module as defined below:

Jumper	Function	Out	In
PL1	Watchdog disable	Enabled	Disabled
PL3	Flash/RAM. This maps 2M of RAM to the Flash location. This is used for debugging.	Flash	RAM

The default setting is all jumpers out.

Card edge leds

There are 8 diagnostic leds, 2 status leds and 1 timecode led.

Diagnostic leds

Led No	Function
1	Comms on 1st Router port (Flashes when data received)
2	Comms on 2nd Router port (Flashes when data received)
3	Comms on 3rd Router port (Flashes when data received)
4	Comms on 4th Router port (Flashes when data received)
5	Comms on Dual comms port (Flashes when data received)
6	Crosspoint set (flash)
7	Lights when the fixed database is in use
8	Database different (idle system only)
Timecode present led	Lights if timecode is present on the selected input

Frame status led (Piped to front panel)

This led is visible via a light pipe when the Eclipse door is closed. It provides pass/fail indication for the system.

Frame Status	
Colour	**Description**
RED	Lights when any error is found. The nature of the error may be interrogated via the card edge display and buttons
GREEN	OK - No errors found
BLUE	Idle (Flashes when HI-CROSS monitor is running internal use only)

Internal status led

Processor Status	
Colour	
RED	RESET - System is reset
GREEN	ACTIVE - Flashes
BLUE	IDLE - Flashes

2405 Frame interface module

Card edge controls

The card edge controls for the 2405 frame interface module are shown below:

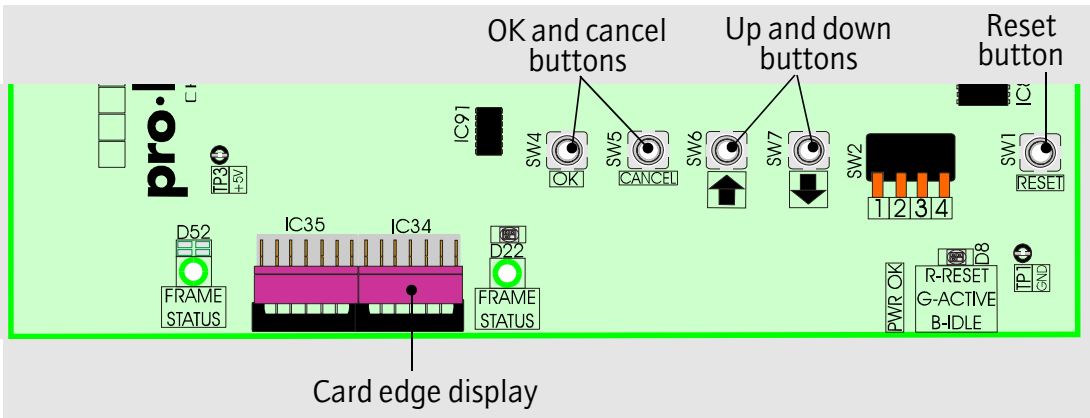

Config switch

There is 1, 2 way dual in line (DIL) switch on the 2405 card as detailed below.

SW2 mode select

Switch	Function	Off (Up)	On (Down)
1	Operating mode	Normal	Test
2	Not used		
3	Not used		
4	HC12 Flash programming voltage	Normal (5V)	Flash(12V)

The default operation is all switches off.

Jumpers and reset button

SW1 Reset button

Pressing this button causes the 2405 frame interface module to perform a total hardware reset. When the button is released the module reboots.

Jumpers

There is 1 jumper on the control card as defined below:

Jumper	Function	Out	In
PL3	Watchdog disable	Enabled	Disabled

The default setting is enabled.

Card edge leds

The 2405 has no diagnostic leds. It has 2 status leds.

Frame status led (Piped to front panel)

This led is visible via a light pipe when the eclipse door is closed. It provides level pass/fail indication for the system.

Frame Status	
Colour	**Description**
RED	Lights when any error is found. The nature of the error may be interrogated via the card edge display and buttons
GREEN	OK - No errors found
BLUE	Idle (Flashes when HI-CROSS monitor is running internal use only)

Internal Status led

Processor Status	
Colour	**Description**
RED	RESET - System is reset
GREEN	ACTIVE - Flashes
BLUE	IDLE - Flashes

5.9 Local configuration

Local configuration is carried out by means of push buttons on the module edge. Status is displayed on an eight character display.

What the buttons do:

Button	Label	Description
SW4	OK	Accept an action or move forward a menu level
SW5	CANCEL	Cancel an action or move back in a menu level
SW6	UP	Go to the previous selection (up the menu)
SW7	DOWN	Go to the next selection (down the menu)

Eight character display

Both the control module (2400) and the frame interface module (2401) have eight character displays on their card edge. Various messages may be displayed depending on the menu selected. Messages with more than eight characters are displayed by scrolling the screen. In a dual control system cards may be active or idle. Obviously for single control systems cards are always active.

The control module display provides information about an entire stack. The frame interface module only gives information about the frame in which it is fitted.

The idle display always provides less information than the active display. Always use the active display menu except for control module database transfer as explained below.

Modules normally display active or idle. Other menus are then accessed using the up/down arrow keys. The exception to this is when there are faults in the system. In this circumstance the module will default directly to the faults menu.

The 2404 ACTIVE system display

The following diagram shows the top level menu for the active system:

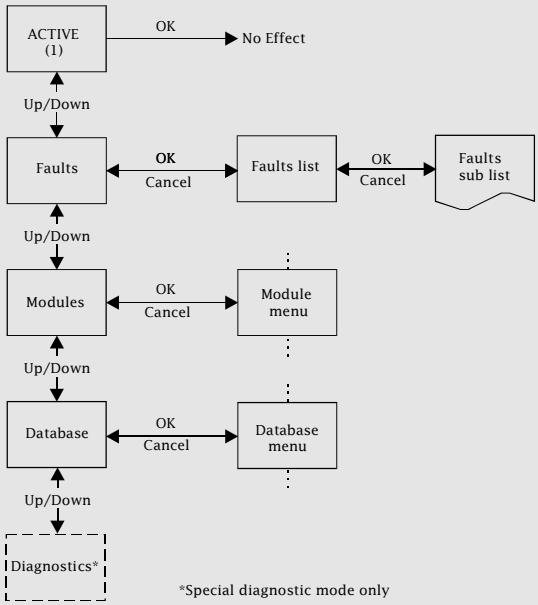

The top level active menu has four displays:

- ACTIVE
- Faults
- Modules
- Database

ACTIVE

This is the default display. If no button is pressed for a minute the display will automatically return to ACTIVE.

Faults

The text displayed will be either 'Faults - None' or 'Faults - XXX', where XXX is the current number of faults logged.

The faults list

If the OK button is pressed from the faults main menu, the faults list will be displayed. If there are no faults then 'NONE' will be displayed. Otherwise faults will be displayed in the following order:

- Control (Comms to Idle system, Multidrop status port connections)
- Fan / PSU faults
- Crosspoint card faults
- Input card faults
- Output card faults
- Other card faults

Pressing the up / down buttons will move through the list sequentially. Pressing the OK button will skip to the next category of faults (e.g. If displaying crosspoint card faults, pressing OK will skip to the first Input card fault, if any).

The modules sub menu

If the OK button is pressed from the modules main menu the modules sub menu will be displayed.

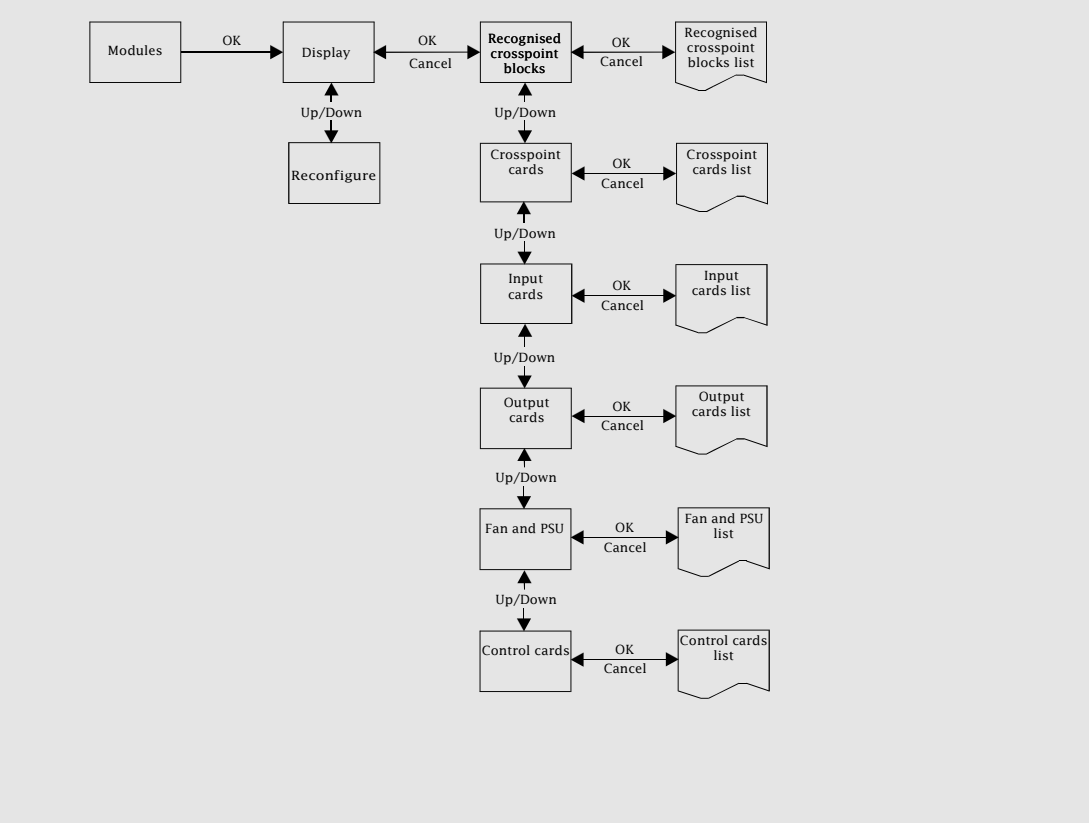

The modules submenu has two displays:

- Display
- Reconfigure

Display

This is the first menu displayed after entering the modules sub menu. The down button goes to the reconfigure menu, the OK button goes to the recognised crosspoint display (or the crosspoint card list in the case of the frame interface module)

Reconfigure

This menu provides the ability to reconfigure the matrix according to the currently equipped cards. The display will show 'Reconfigure ?'. Pressing the OK button, requests confirmation, if OK is pressed again the installed modules tables are updated with the current installed modules. It is important that all required cards and frames are installed / connected and any cards added after will not be used. They will however be logged as faults.

The modules display sub menu

This is displayed after pressing the OK button in the display sub menu of the modules main menu (see the diagram on the previous page).

The modules display sub menu has five displays:

- Recognised crosspoint blocks
- Crosspoint card list
- Input card list
- Output card list
- Fan and PSU list
- Control cards

Scrolling through these lists using the arrowkeys will show the module types and frame positions they occupy. Pressing OK when reaching a fan or PSU module will display the temperature of that module.

Recognised crosspoint blocks

This produces a list of crosspoint blocks available for the currently configured cards. The list shown is in the form of 'SSS-SSS X DDD-DDD …' Where SSS-SSS is the minimum and maximum sources and DDD-DDD is the minimum and maximum destinations for a block. Multiple blocks can be shown if there are holes in the matrix.

The database sub menu

These are displayed after pressing the OK button in the database main menu.

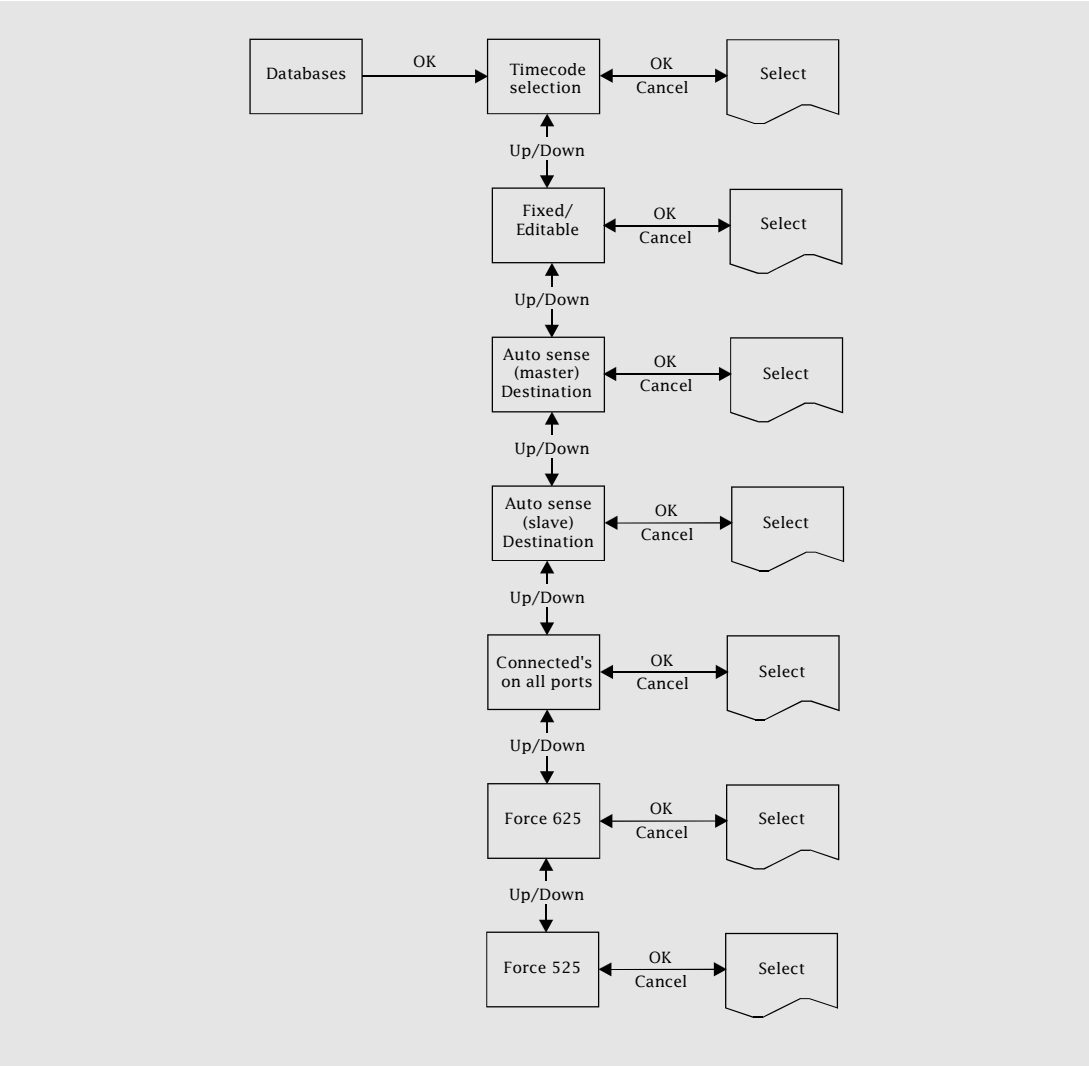

There are seven displays from the database main menu:

- Timecode selection
- Fixed/Editable
- Auto sense (master) destination
- Auto sense (slave) destination
- Connected's
- Force 625
- Force 525

Timecode selection

This menu has 4 options as shown below.

Display	Timecode	Standard
TC = LTC (625)	Linear timecode	PAL
TC = LTC (525)	Linear timecode	NTSC
TC = VITC (625)	Vertical interval timecode	PAL
TC = VITC (525)	Vertical interval timecode	NTSC

Fixed/Editable

This displays the current database in use:

- 'Fixed DB'
- 'Editable DB'

Auto sense (master) destination and Auto sense (slave) destination

These menus are only of use where the 2400 is fitted with an auto-sensing sub-module. Auto sense can be set for both the master and the slave controller, the Up / Down button moves between them. The master configuration will display:

- 'Auto sense (Master) = X'
- 'Auto sense (Master) = OFF'

where X is either 1 or 2 (destination 1 or 2). Pressing down from the Auto sense (Master) setting will display the Auto sense (Slave) setting in the same way. Pressing the OK button will cycle through the possible settings - 1, 2 or OFF.

Connected's on all ports

This controls which control system ports are sent connected messages once a crosspoint has been set:

- All ports
- Single port

Force 625

This forces the reference for all sources to 625.

Force 525

This works in the same way as the force 625 menu. It provides a way of setting all the sources to 525.

The 2404 IDLE system display

The following diagram shows the top level menu for the idle system:

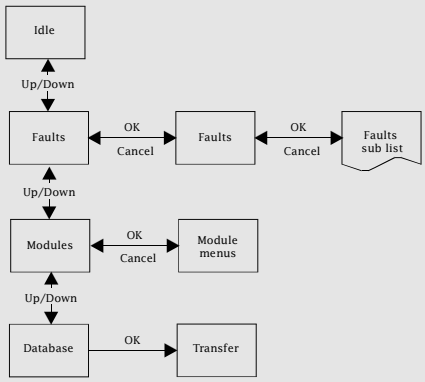

The top level idle menu has four displays:

- IDLE
- Faults
- Modules
- Database

The only time it is necessary to use the menu on the idle control module is when a new control module is fitted into a system and requires a database transfer.

The first three menus report similar information to those on the active module.

Note: The faults list only displays control faults.

Transfer

This menu provides the ability to transfer the database from the Active to the Idle system. The display will show 'Transfer DB ?'. Pressing the OK button, causes the database to be requested from the active system. During the transfer process the display will show 'Transferring …'. Once complete it will either show 'Successful' or 'Failed'.

The 2405 system display

Only information relating to the frame in which the module is fitted is reported.

The following diagram shows the top level menu for the system.

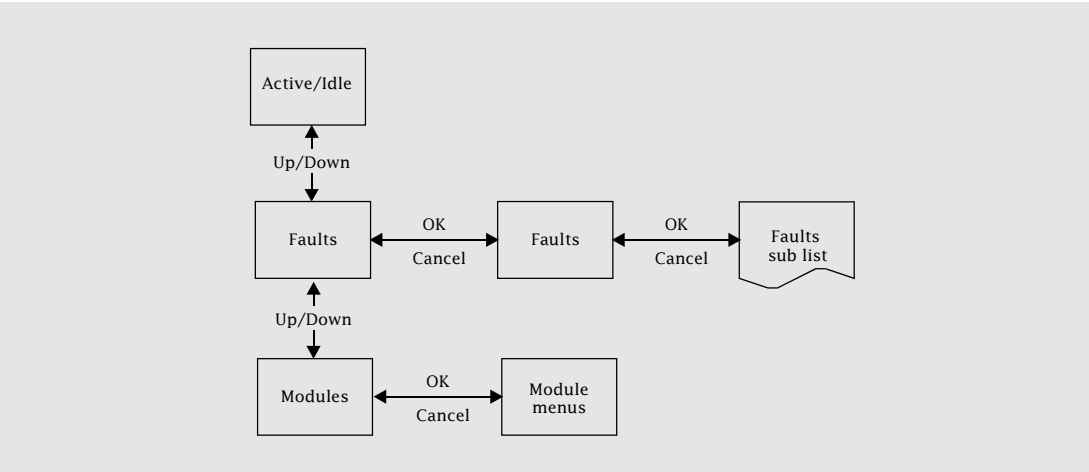

These menus work in exactly the same way as those on the 2404.

5.10 Remote configuration

Remote configuration is carried out by connecting a terminal to either controller config port.

Eclipse Editors

This is a PC based terminal emulation package supplied on disk with the router. It writes information into the editable database on the control card via ASCII strings. Alternatively any RS232 terminal may be used.

The Eclipse editor may be used to download pre-set command files for purposes such as system initialisation. It also has the ability to upload a database which can be re-downloaded with or without change.

Eclipse controllers contain two databases, one fixed and the other editable. The fixed database is stored in Prom and can be recalled from the 8 character display on the Eclipse control module. The editable database can be updated either from the editor or the 8 character display on the control module.

It is possible to modify the editable database while the fixed database is in use. Any changes made will only take effect when the Eclipse controller is set to use the editable database.

Database data consists of:-

Router input parameters
Router port configuration data
Crosspoint trigger method
Checksum

The router can also be controlled using this method.

Dual Databases

The editor will work if plugged into either the active or idle control card.

If the editor is being used on the active controller then a database transfer from the active to the idle controller should be requested via the 8 character display on the idle controller.

N.B. Database transfer can only occur from active to idle card and can only be requested by the idle controller.

A database transfer also includes a transfer of tally table data for the number of destinations configured. Transfer of database information and tally table data may take up to one minute.

If the editor is being used on the idle controller then to transfer the database to the other 'active' controller the idle card must first become active. This is achieved by pressing the RESET button on the active card. The idle card now becomes the active card and vice versa. The 'new' idle card can now initiate a database transfer request.

Help

The system provides a local help facility consisting of a display of the command library and a line description of individual command formats.

Configurable Features

A summmary of the Eclipse editor, ASCII based, commands are shown below:

Syntax	Command
CP	Configure RS485 router ports
CV	Crosspoint trigger method
IP	Input Parameters
S	Set Crosspoints
IM	Read installed modules to re-configure system
RS	Reset system
D	Diagnostics
T	Test
?	Help
?xx	Detail Help Command

Eclipse Editor Protocol

This section details the Eclipse editor ASCII commands. By omitting the parameters enclosed by the square brackets, the command is turned into an interrogate function. In this instance, the information returned is the omitted item(s).

When commands are used as interrogate functions, the returned answer is formatted in such a way that it can be saved to a disk file on a PC (using the supplied PC package) and re-downloaded again at a later date (when using the PC package provided).

Help (?)

Displays a complete list of all available commands.
?

Detailed Help Command (?XX)

Gives information on a particular command syntax.
?command

Command	Any command, e.g. RS

Error Responses

There are three basic types, which are:

INVALID COMMAND	Returned if an invalid command was entered
INVALID DATA IN COMMAND	Returned if invalid data was entered in command
COMMAND LINE TOO LONG	Returned if a command line of more than 100 characters was entered

Configure Ports (CP)

Sets protocols and transmission characteristics of the four router control ports.
CP[,port][,baud rate,data bits,parity,stop bits]

Port type:	A = RS485 router port 1 B = RS485 router port 2 C = RS485 router port 3 D = RS485 router port 4 E = All 4 router ports
Baud rate:	23 = 230400 11 = 115200 57 = 57600 38 = 38400 19 = 19200 96 = 9600 48 = 4800 24 = 2400 12 = 1200 3 = 300
Number of data bits:	7 or 8 (N.B. Pro-Bel protocols always require 8 bits)
parity:	E = Even O= Odd N = None
Stop bits:	1 or 2

Crosspoint trigger method (CV)

Sets trigger method, line number and position on the line to switch for each video reference.

CV[,Ref][,trigger,Line Number,Line position]

Ref:	1 = 625 2 = 525
Trigger:	P = Picture F = Field
Line number:	Line number to switch on (6-20 for 625; 10-20 for 525)
Line position	1 to 8 = position (in 4uS steps) between 16 and 44uS

Router input parameters (IP)

Used to set:
reference number for digital video sources.

Individual or a range of sources can be set.

IP [,type] [,source range] [,reference]

Type:	2 = Digital video
Source range:	x-y where x = start source, y = end source To programme individual sources just type in the start source omitting hyphen and end source
Reference:	1 = 625 2 = 525

Set Crosspoints (S)

Sets crosspoints from the terminal program.
S [,destination] [,source]

Destination:	Destination number
Source	Source number

Reconfigure Router (IM)

Determines the equipped router size by reading the installed modules
IM [,Configure]

Configure:	**C = Reconfigure handshakes**

Reset System (RS)

Resets system from 'Configure' port.
RS

Diagnostics (D)

On-line diagnostic functions. Interrogate only.
D,number

Number:	**1 = display information about router** **2 = display faulty modules**

Note: This function is intended for Pro-Bel use only

6 Troubleshooting

The Eclipse router is a complex piece of equipment and although things should not go wrong, this chapter contains some guidelines on what to do if you have any problems. If it is not possible to identify and rectify the problem by following these guidelines, then details of who to contact can be found in chapter 7 -Support information.

Potential problems can be classified at four levels:

- System failure — Failure of a PSU or fan
- Major system error — It is not possible to set any routes
- System error — It is possible to set some routes but others fail
- Minor error — There is an error on a single route

The Eclipse router features extensive internal diagnostics via the control system. The frame status leds on the edge of the control module and frame interface module (visible via a light pipe with the unit doors closed) provide immediate pass/fail indication. System failure or major system error faults will be indicated by a red led. System errors will usually also be indicated. Minor errors may be indicated dependent on the nature of the fault. In any instance where the frame status led is red check the faults list on the active control module or frame interface module as the first step in trouble shooting.

6.1 System failure

A system failure has occurred when the system is inoperable, only 1 PSU of a main and backup pair is operating or some or all of the fans have failed.

Power failure

To detect a power failure check the PSUs as follows:

Is the 5V led lit on the PSU? —Yes→ Check the 5V leds on each module.

↓ No

Is the mains led on? —Yes→ Check that the PSU is correctly fitted and pushed home. If it is and the PSU led is still not on then there is a fault on the PSU and the PSU should be returned.

↓ No

Is the IEC connector connected to the correct PSU and powered? —Yes→ Check the fuse. If required there is a spare fuse in the fuseholder drawer.

↓ No

Make good the IEC connection. If the problem still persists contact customer support.

Fan failure

Fan failure has a potentially catastrophic effect on system performance and must be rectified as quickly as possible. Typically an Eclipse router will continue to operate for 2 hours with all fans failed. However beyond this time it is possible that the system will go into thermal shutdown. A system with a single failed fan should operate for longer periods but this cannot be guaranteed. Additionally the long term reliability of the unit may be affected.

To detect a fan failure check the fans as follows:

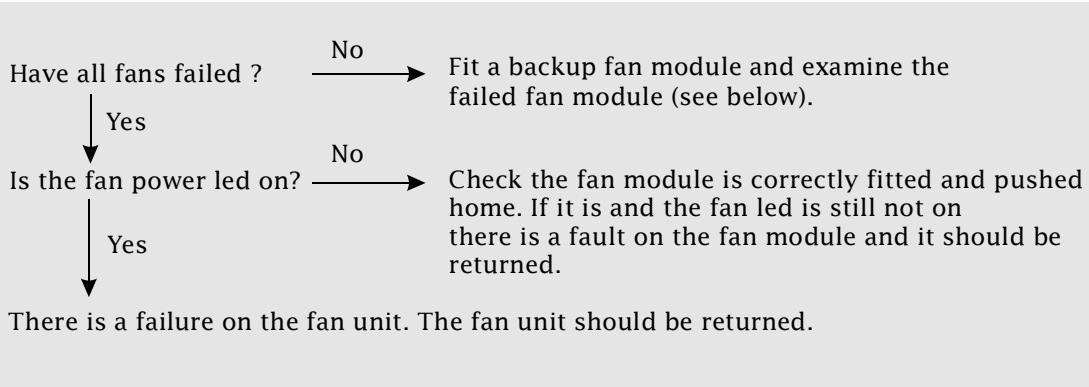

Examining a fan module

Check that the connector from the dc fan to the fan module printed circuit board is correctly fitted and fully engaged. Check that the fan blades rotate freely.

Running the Eclipse router with a failed fan

Try to maintain the ambient temperature at a low level. Remove any signal modules not in use to minimise PSU load.

Operating temperatures

Relay monitoring provides indication of PSU or fan unit failure. Additionally the control system will indicate an error (and set the frame status led to red) for the following conditions:

- Inlet air temperature > 40°C
- PSU temperature > 80°C
- Internal temperature rise > 40°C

6.2 Major system error

A major system error occurs when the unit is correctly powered and the fans are running but no routes can be set.

To detect a major system error check the following:

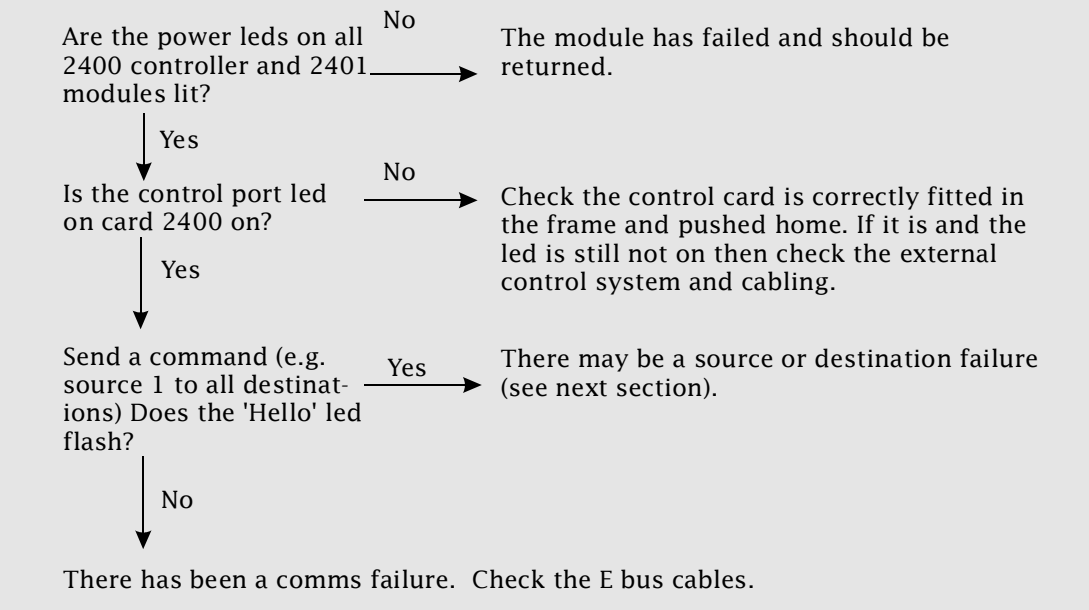

6.3 System error

If some routes are functional but others are not it is likely that there is a signal module failure in the system.

Set the route and trace the point of failure by substitution.

Swap the input module with one that is known to be functional.

If sources 1,2,3 and 4 can be set to destination 1 then input card 1 is a known good card.

Similarly swap the output card.

If source 1 can be set to destinations 1 to 16 (or 1 to 32 for single output module) then output card 1 is a known good module.

Swap the crosspoint card.

Firstly check that the hello led on the relevant crosspoint card blinks when the route is sent by the control system. If it doesn't this suggests a logic failure - try another crosspoint card. If the hello led does blink, there may be a signal path problem on that crosspoint card. Identifying a fully functional crosspoint card is more difficult than input or output cards since each card deals with 4160 signals (64 inputs x 64 outputs + 64 expansion inputs). To get a good indication that crosspoint module 1 is fully functional follow this procedure

- Check that source 1 can be routed to destinations 1 to 64 (it may be necessary to move a known good input card into the relevant slot to do this)
- Check that sources 1 to 64 can be routed to destination 1 (it may be necessary to move a known good output card)
- Check that sources 65 to 128 can be routed to destination 1 (this checks the expansion inputs of the crosspoint card)

6.4 Minor error

Where one route has failed or is intermittent the fault may be a failed module as above. However it is equally likely that the problem may not be due to any component failure at all. If one input cannot be routed try physically connecting it to another source or routing it via another path or piece of equipment. Try bridging the route using a BNC barrel. If the signal works via another path this may indicate a module fault or it may indicate that the signal is marginal in performance and is outside of guaranteed Eclipse specification. For one failed output, try the dual of that output or else another destination. Possibly the downstream equipment is not performing correctly.

Check that all modules in the Eclipse system are plugged fully home.

It may be necessary to employ specialised test equipment to carry out further fault finding.

If the reason for the fault cannot be diagnosed contact customer support.

6.5 Diagnostics

The control module has a special diagnostics mode which may be useful in tracing faults. This mode is intended for Pro-Bel use only and its operation is not guaranteed.

Diagnostics mode is enabled by setting DIL switch 7 on the 2400 control module down. In this mode an extra menu is available from the Active system display. Access to this menu is achieved by pressing the down arrow from the database display.

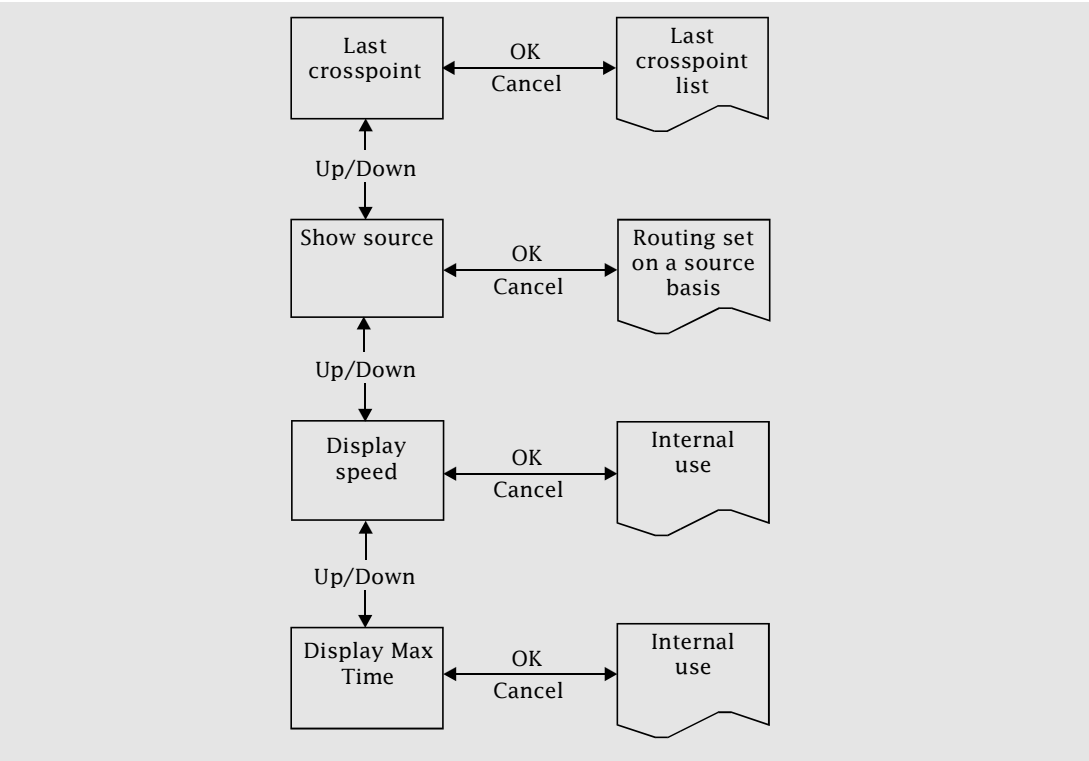

Last crosspoint list

Shows the last crosspoint set. Previous crosspoint commands may be shown by using the arrow keys.

Show source

Initially shows the destination that source 1 is routed to. Other sources may be selected using the arrow keys.

Other menus

These relate to software execution times. Explanation of these is beyond the scope of this manual.

7 Specification

The following specification is based on a 256 x 256 router equipped with equalising inputs and reclocking outputs.

Inputs

Type	Unbalanced NRZI coded serial data
Standard	Serial EBU Tech 3267E. SMPTE 259-ABCD
Impedance	75Ω
Data rate	140 to 360 Mbit/s
Return Loss	> 15dB 10MHz to 360MHz, typically > 17dB
Amplitude	800mV p-p nominal
DC Offset	< 5V
Equaliser	Automatic for up to 275m cable (Belden 8281, PSF 1/2), typically better than 300m

Outputs

Type	Unbalanced NRZI coded serial data
Standard	Serial EBU Tech 3267E. SMPTE 259-ABCD
Impedance	75Ω
Data rate	140 to 360 Mbit/s
Return Loss	> 15dB 10MHz to 360MHz, typically > 17dB
Amplitude	800mV p-p ±10%
Overshoot	< 7%
DC Offset	0V ± 0.5V

Performance

Data acquisition	20 mS
Rise time	<0.5 nS
Jitter	<0.5 nS (<0.75 nS with > 200m input cable)

Power consumption

128 x 128, dual outputs	500W typically
256 X 256, single outputs	900W typically
Additional input frame (128 inputs)	300W typically
Additional dual output frame (128 dual outputs)	300W typically

General

Frame dimensions	19” rack mounting x 485 mm deep (excluding mating connectors)
Typical systems sizes	
128 x 128	15 RU (single or dual outputs)
128 x 256	15 RU (single outputs) 22 RU (dual outputs)
256 x 256	22 RU (single outputs) 29 RU (dual outputs)
Maximum system weight:	40 Kg per 7 RU
Operating temperature	0°C to 40°C
Storage temperature	-5°C to 70°C
Typical exhaust air temperature (relative to input)	+10°C